One Monk Miniatures

Model copyright ©2009 J.Hartman onemonk.com – – – – – – – – Score dashed lines before cutting by hand.

Terra Force™ Wolverine Medium Battle Tank

Credits:
Model geometry and unfolding: Nate Augustyn
Cutting template: Eric Brown
Everything else: Jim Hartman

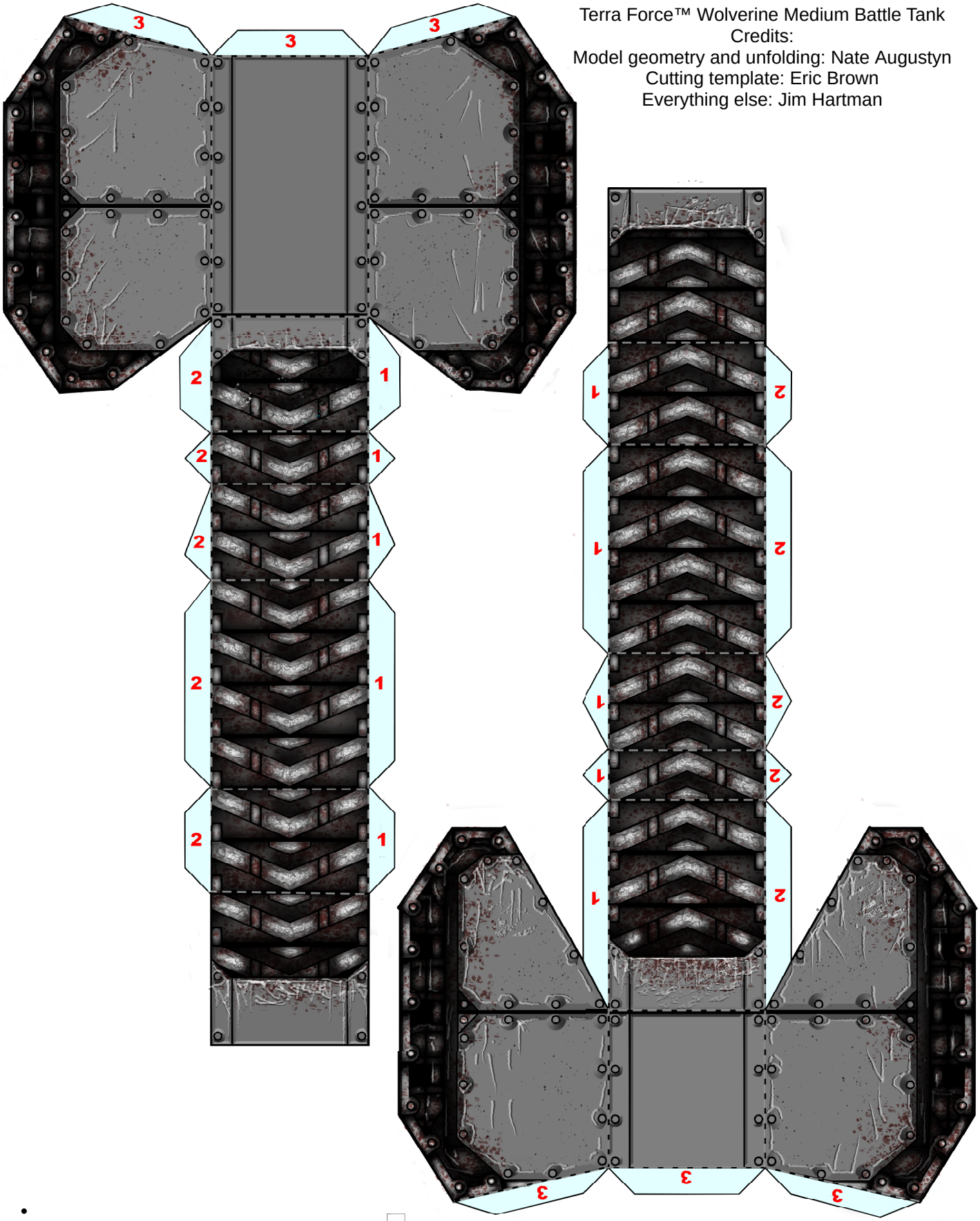

Printing: turn scaling OFF, have centering ON, set to GOOD or BEST setting, Use Matte Photo paper for best results.

One Monk Miniatures

Model copyright ©2009 J.Hartman onemonk.com – – – – – – – – Score dashed lines before cutting by hand.

Terra Force™ Wolverine Medium Battle Tank

Credits:
Model geometry and unfolding: Nate Augustyn
Cutting template: Eric Brown
Everything else: Jim Hartman

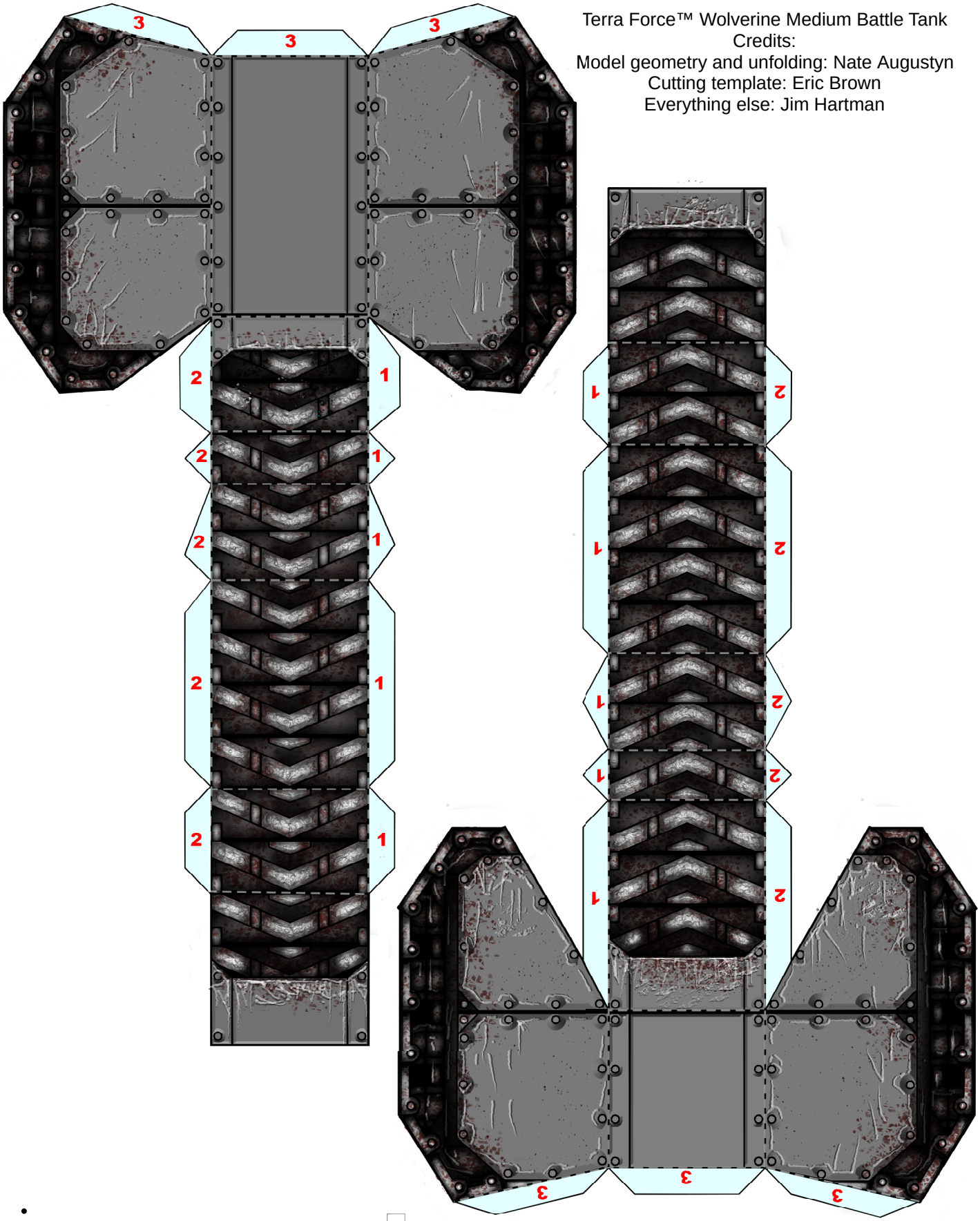

Printing: turn scaling OFF, have centering ON, set to GOOD or BEST setting, Use Matte Photo paper for best results.

One Monk Miniatures

Model copyright ©2009 J.Hartman onemonk.com – – – – – – – – Score dashed lines before cutting by hand.

Terra Force™ Wolverine Medium Battle Tank

Credits:
Model geometry and unfolding: Nate Augustyn
Cutting template: Eric Brown
Everything else: Jim Hartman

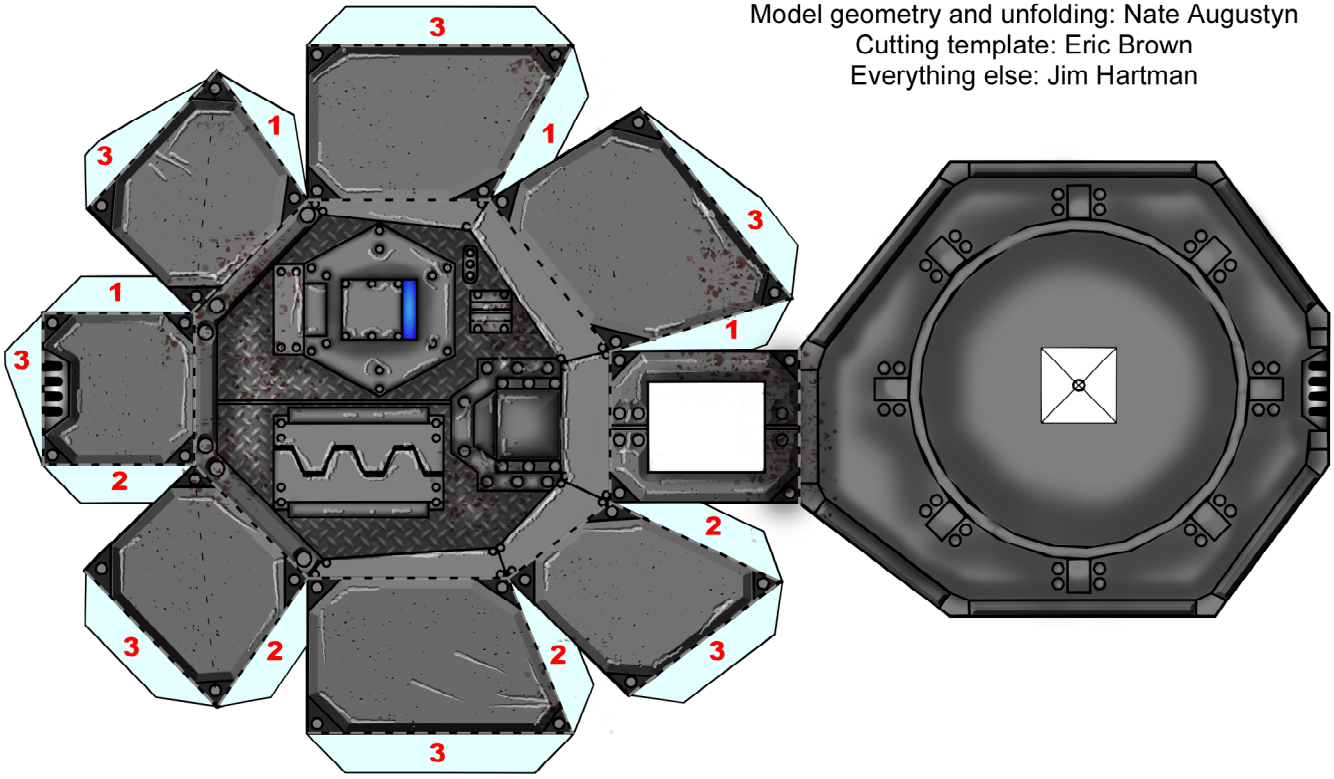

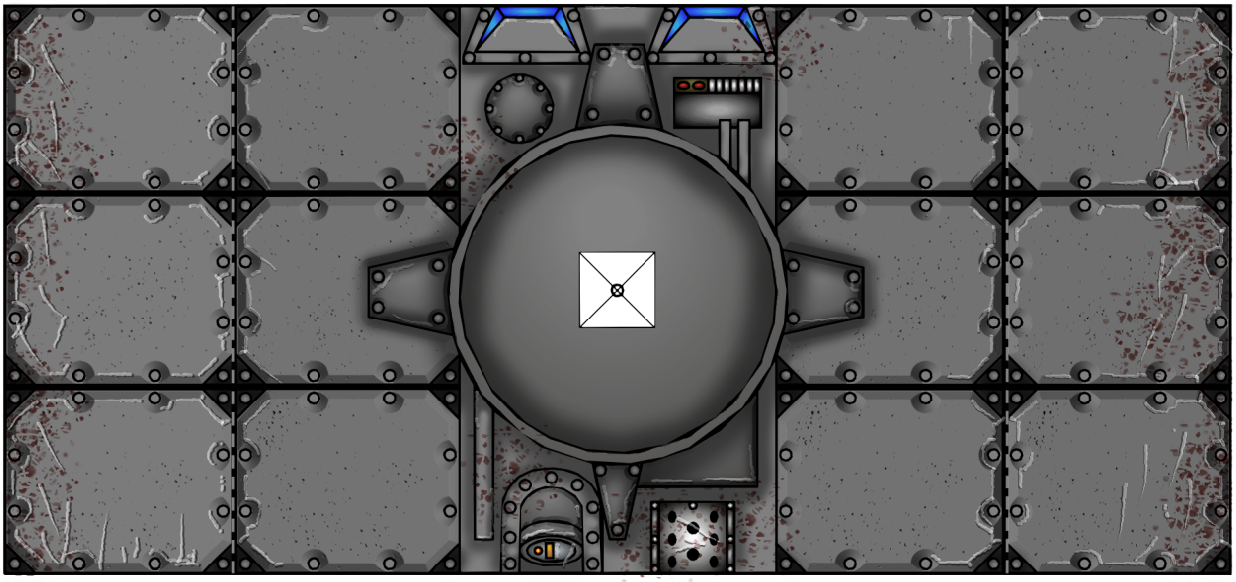

Feed paper into cutter this way

Printing: turn scaling OFF, have centering ON, set to GOOD or BEST setting, Use Matte Photo paper for best results.

One Monk Miniatures

Model copyright ©2009 J.Hartman onemonk.com – – – – – – – – Score dashed lines before cutting by hand.

Terra Force™ Wolverine Medium Battle Tank
Credits:
Model geometry and unfolding: Nate Augustyn
Cutting template: Eric Brown
Everything else: Jim Hartman

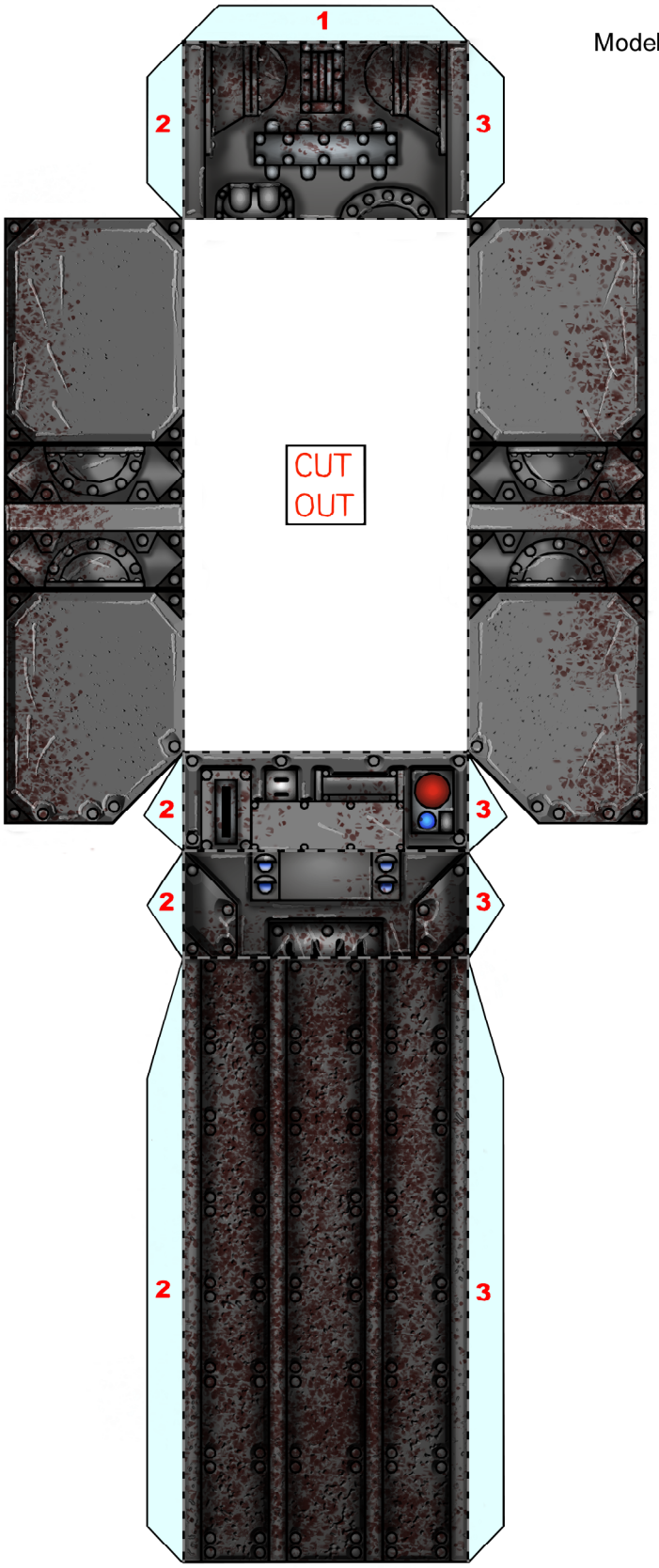

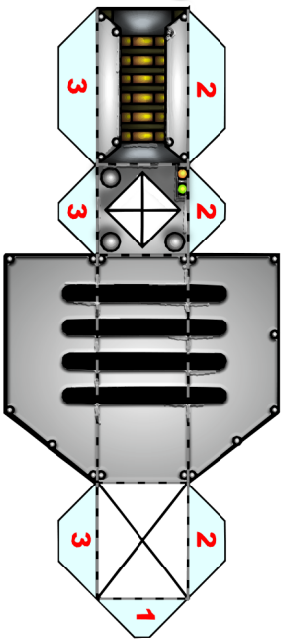

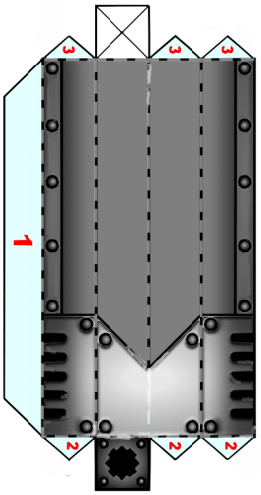

Feed paper into cutter this way

Printing: turn scaling OFF, have centering ON, set to GOOD or BEST setting, Use Matte Photo paper for best results.