File Index

Please do not resize these files, as they have been scaled appropriately to U.S. Standard paper for 28-32mm scale miniatures.
65 lb cover weight (176 gsm) card stock recommende for prints

Page 2-4: Cube Instructions, Cube, and Cube Supports.

Page 5-6: Wedge Instructions and Wedge.

Page 7-8: Step Instructions and Steps.

Page 9-10: Optional insert templates.

© 2/20/2021 by Misterbones23, Otherwise Known as Mister Bones, or C. Radtke

1: cut out the cube leaving the outlined tabs intact. Then fold the outlined tabs to the inside of the piece. fold the cube sides along its folding lines then glue them to the outlined tabs forming the shape of the cube. Leave the top of the cube face unglued.

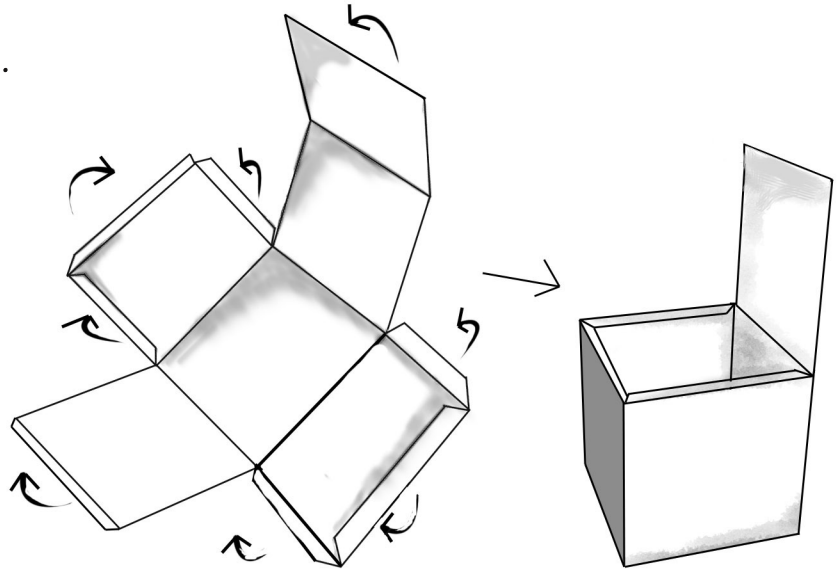

2: if using supports cut out support pieces leaving tabs, then cut out all the inner colored squares of the supports before folding together into rectangular polls. Once this is done slide support B through support A lining up the openings so that support C may fit through as shown in the diagram. Then glue the support cross section into the cube.

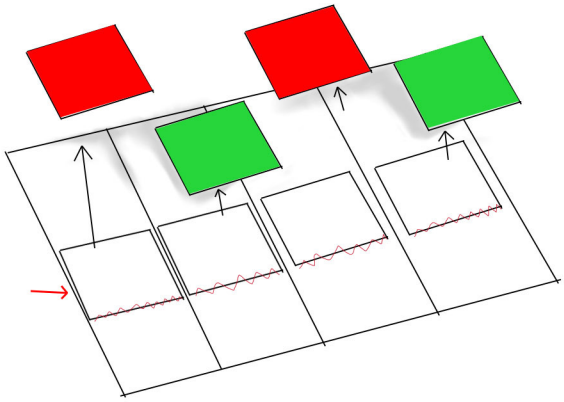

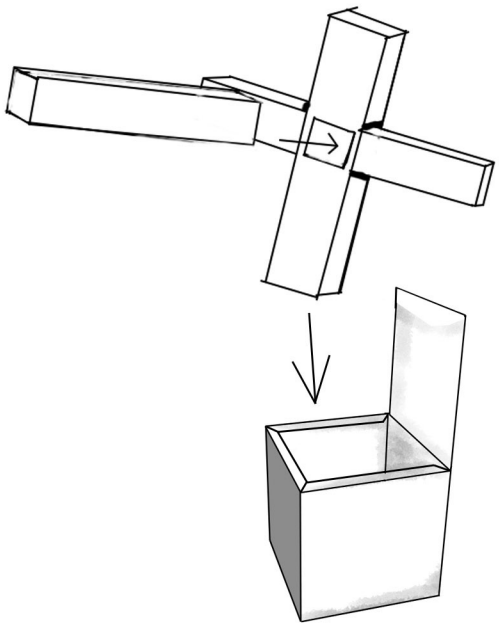

3: Glue the top tab onto the inside of the cubes face and glue the top face down to the tabs and support structure. Forward face

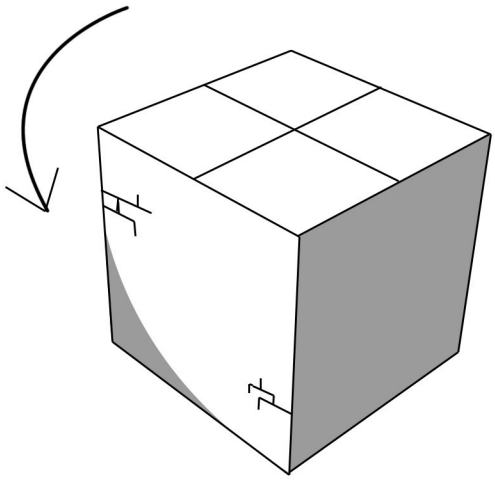

Cube Instructions

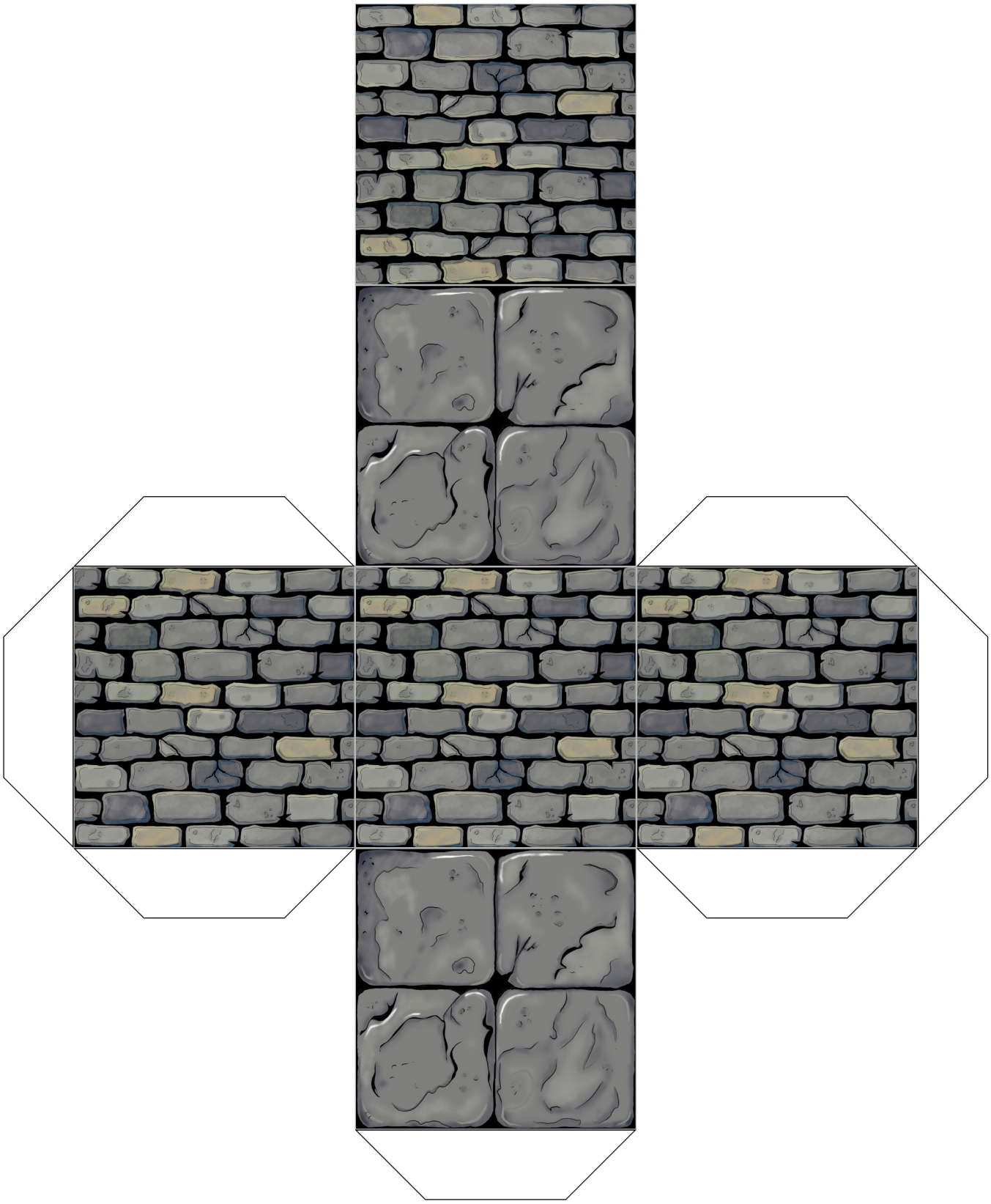

Cube Print

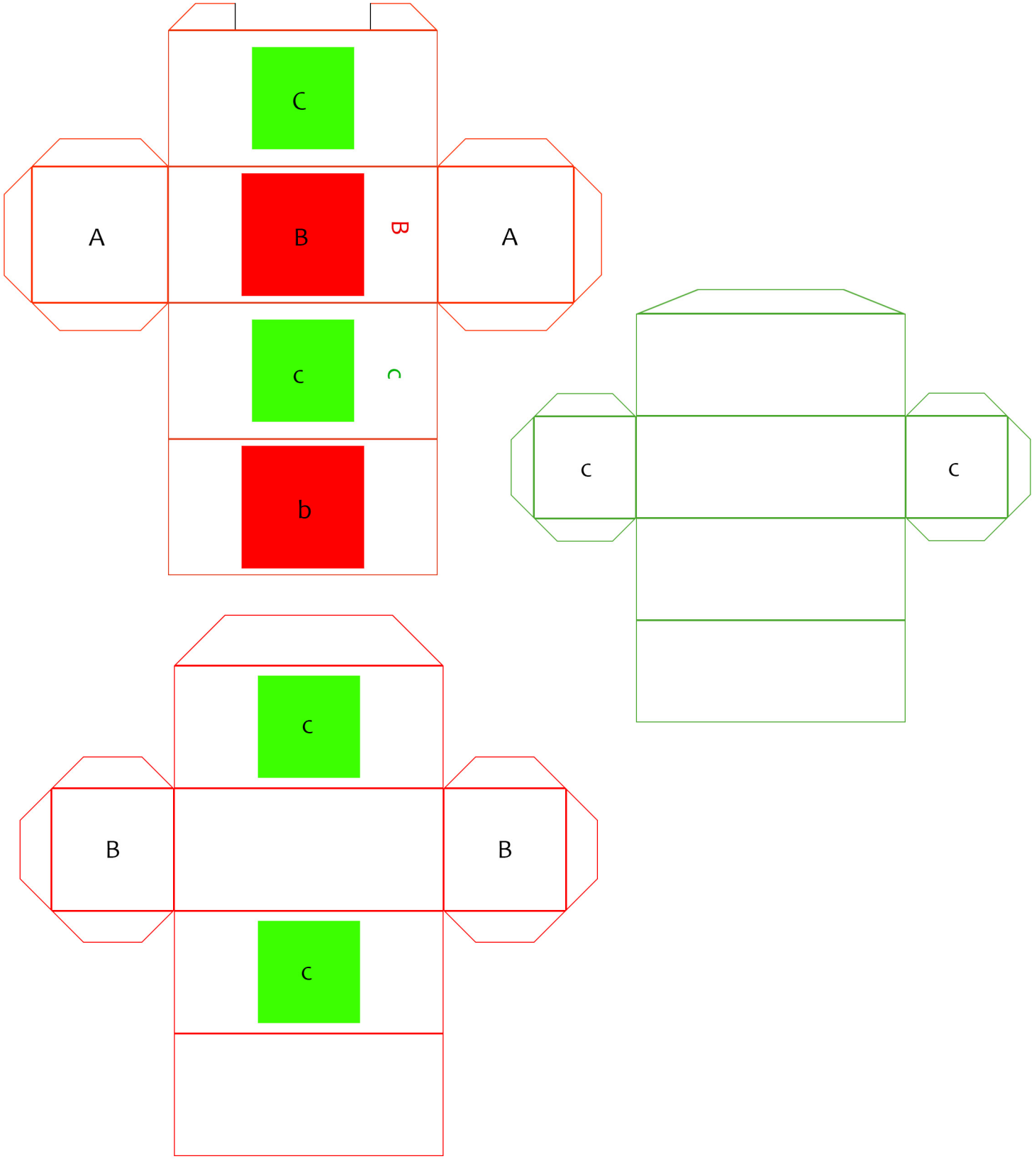

Cube Support Cross

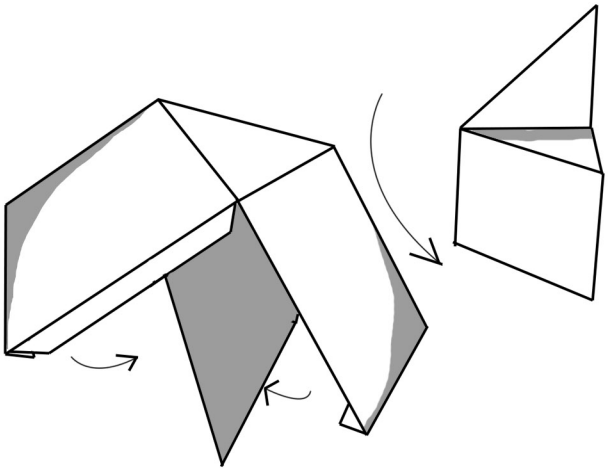

1: Cut out the wedge leaving the outlined tabs intact. Then fold the outlined tabs along the black or gray folding line to the inside of the piece. Fold the wedge pieces along their folding lines and glue them to the outlined tabs, leaving the bottom piece unglued.

2: If using the support piece, cut out and fold the piece together into an elongated wedge in a similar fashion to the actual wedge. Glue this to the approximate center of the wedge short side down.

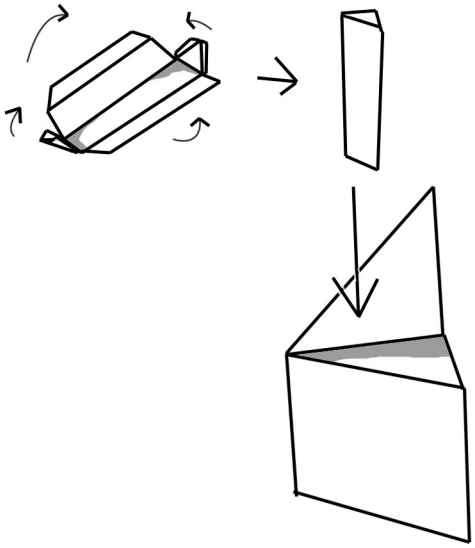

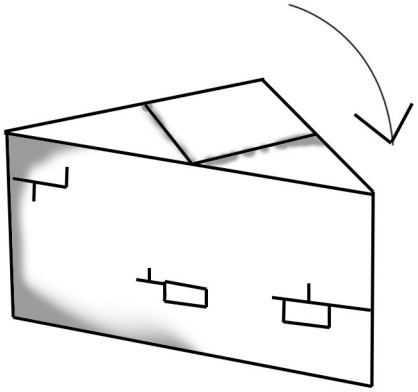

3: Fold and glue the bottom of the wedge to the tabs and support.

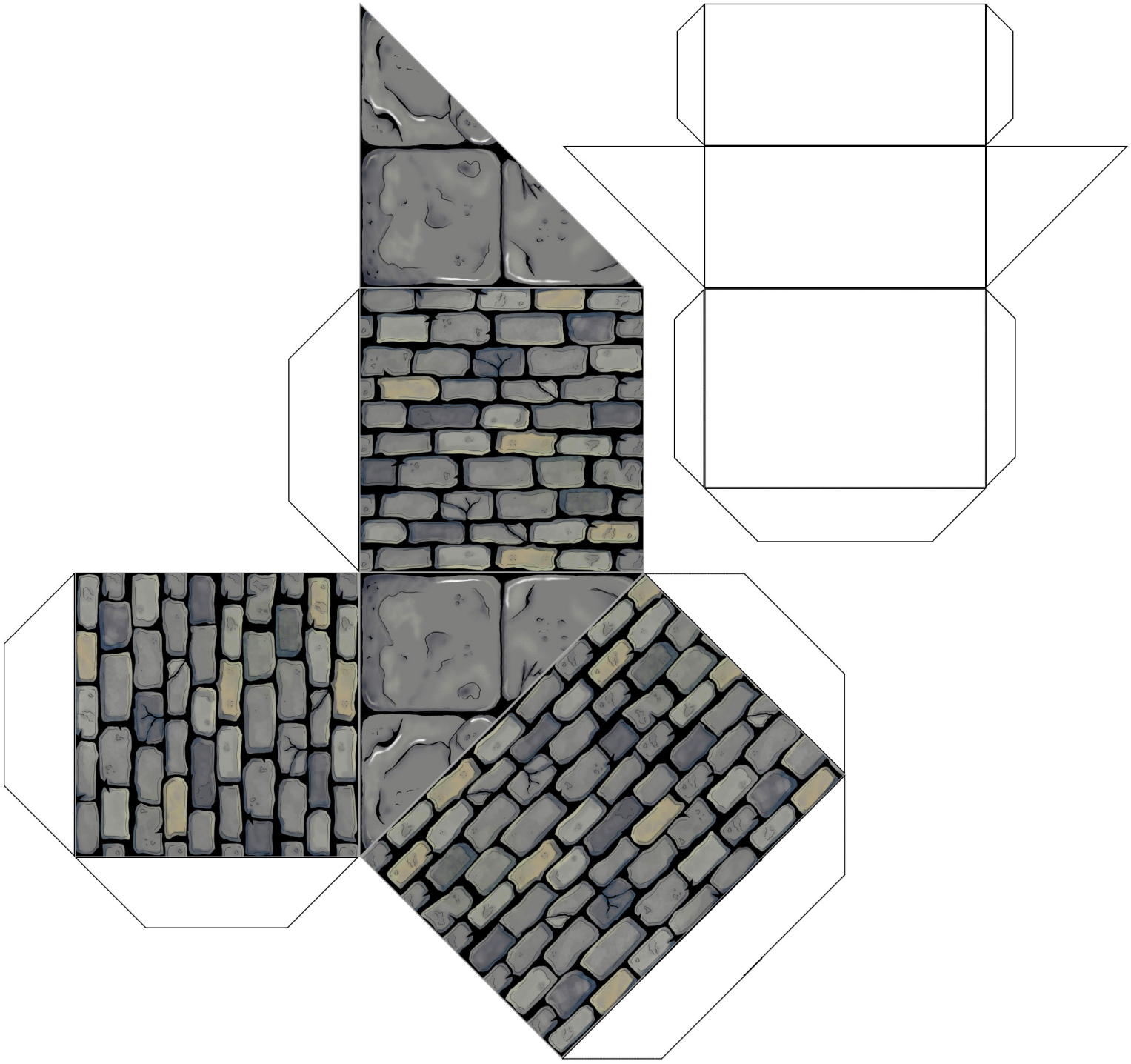

Wedge

1: Cut out all pieces leaving outlined tabs intact. Carefully cut the step strips along the **Long Side** free from each other and the stair side that the long side is connected to. However leave the **Short Side** attached to the stairs body so each strip may fold independently from one another. Fold the back side, the top piece (still conected on it's short sides), and the left and right sides together and glue them, leaving the bottom and all step strips unglued.

2: Fold the Top step strips down and glue the tabs at their tops to the opposite facing side leaving the two without tabs unglued as shown in the diagram. Then glue the forward facing step strips to the opposite facing stair side using the tabs ignoring the two steps with no front facing stair strip for now.

3: Fold together the Shadow Boxes so that the black is on the inside leaving the long white tab unfolded. Glue the small outlined tabs to the white outside space of the shadow box. Then glue the shadow boxes to the inside of the two steps that have no front facing stair strip. Glue the long tabs on the shadow boxes under the step in front of them, then glue the top step strips, that have no tab, to the top of the shadow boxes.

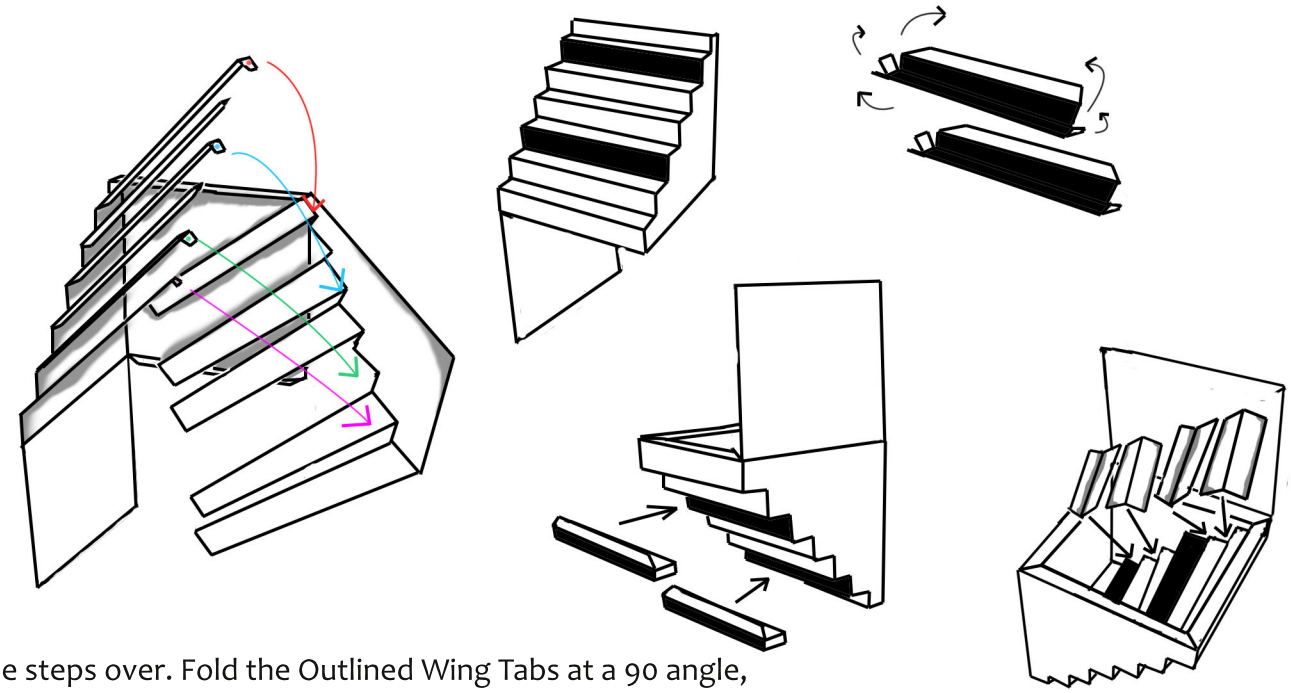

4: Turn the steps over. Fold the Outlined Wing Tabs at a 90 angle, then glue them between the steps on the inside so that the strips become a whole piece. Do this by alternating the tabs so that they can be glued concave and convex between the steps.

5: If using a support block, fold and glue the rectangle together in a similar fashion to the Shadow Boxes except this one is selled and has no openings. Then glue it to the inside of the stairs so that the long side is flush with the top.

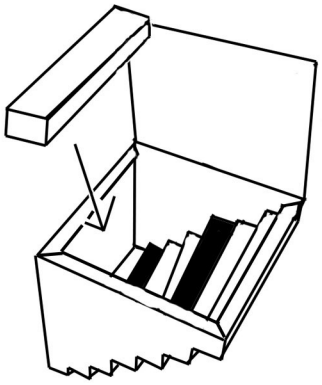

6: Fold and glue the bottom of the stairs down to the tabs and support strip.

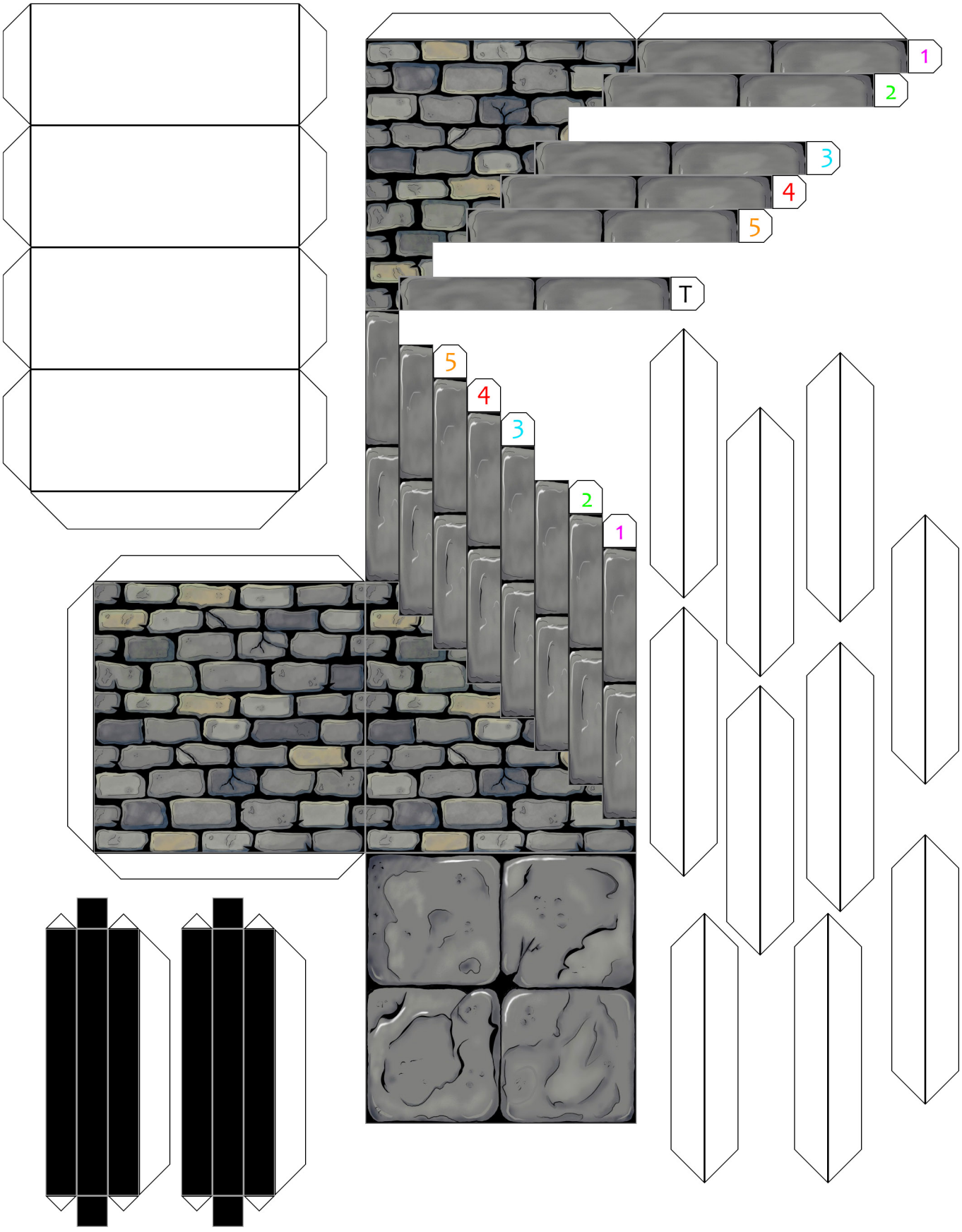

Stair Instructions

These templates are to be used to cut out a piece of material that is 5mm in thickness, as an alternative support to the support strips.

Cube Template:

Cut out 2-C1s, 2-C2s, and 2-C3s. The C1 pieces are glued on the outside of the C2 pieces, and the C3 pieces are glued on the inside of the other two to make the inside of the cube.

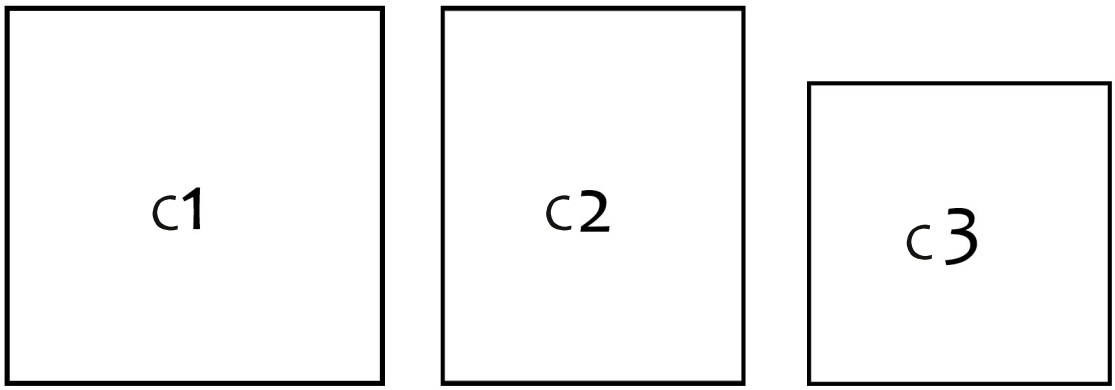

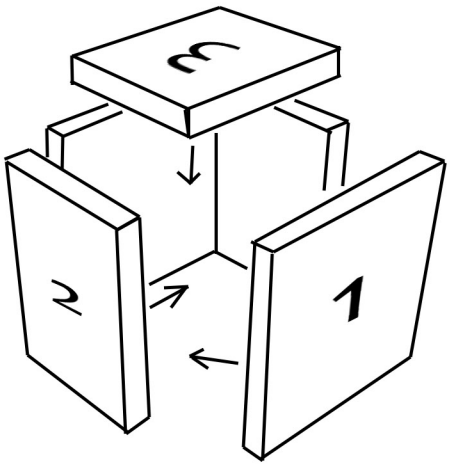

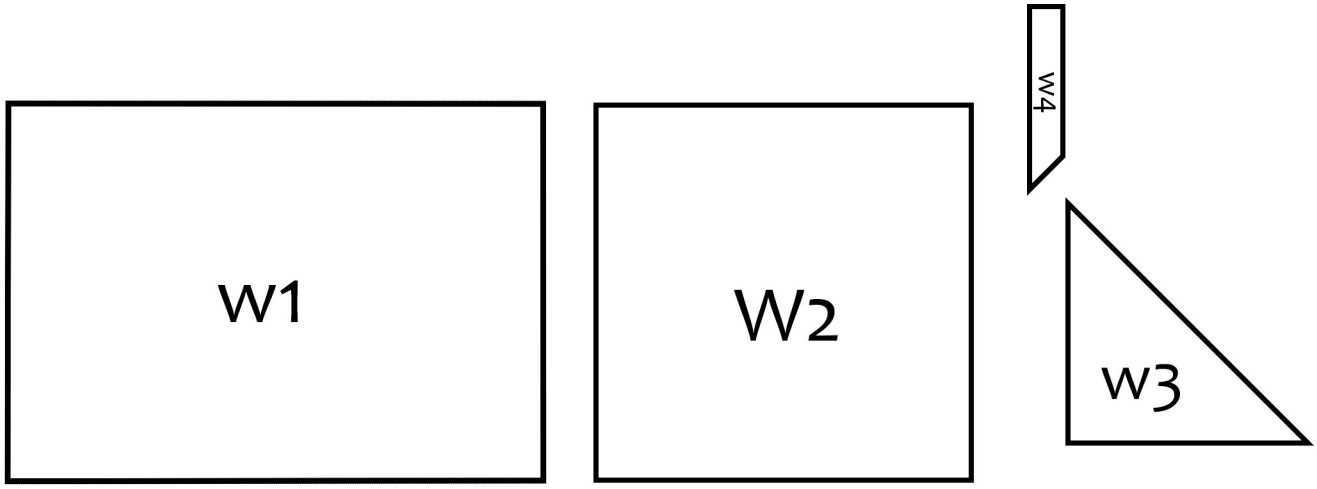

Wedge Template:

Cut out 2-W2s, 1-W1, and 2-W3 pieces. Use the W4's angled side as a guide to cut the thin Left and Right sides of the W2 pieces at an angle. Then glue the W2 pieces and the W1 piece together as shown in the diagram. Then Glue the W3 pieces to the inside of those.

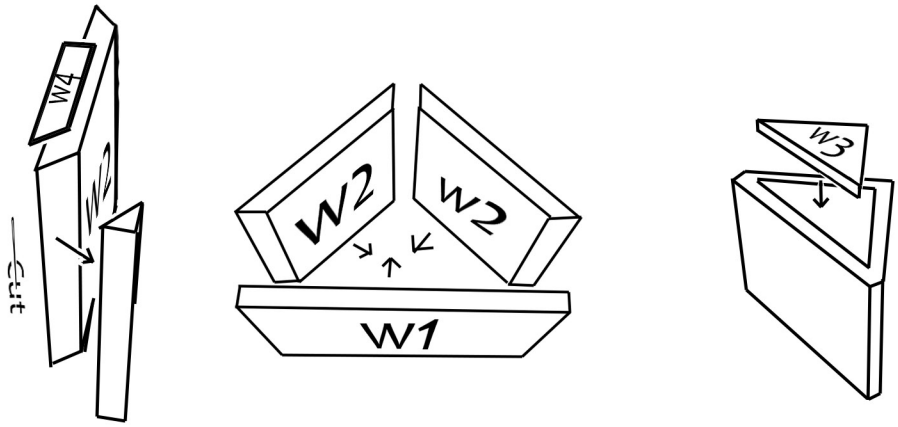

Staircase Template:

Cut out and Glue between 4-6 S1 pieces and glue them to the inside of the staircase.

