To save myself some time and effort I decided to have the Mortis Blockhead be an add-on, instead of an additional separate kit.

The great thing is that you will be able to use much of the original set of templates for the leviathan. The differences will be:

- Head
- Weapon Arms
- Shoulder add-ons

Once again READ ALL INSTRUCTIONS BEFORE STARTING!

Head:
Start by building each object and have your pile handy. You should be able to follow these images to see the basic assembly order and position.

Head_1.1.jpg

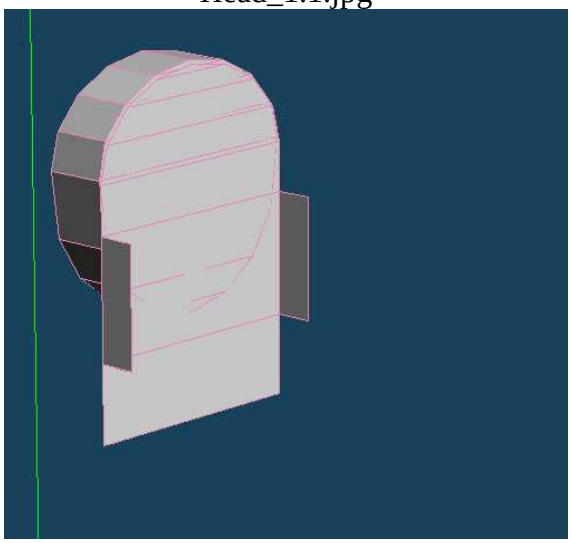

Head_1.2.jpg

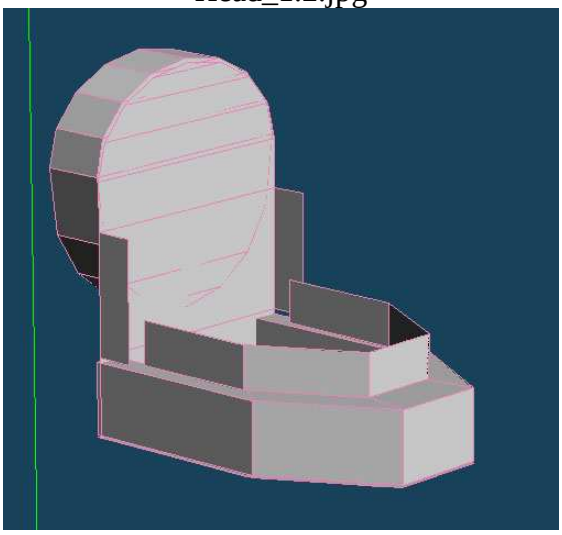

Head_1.3.jpg

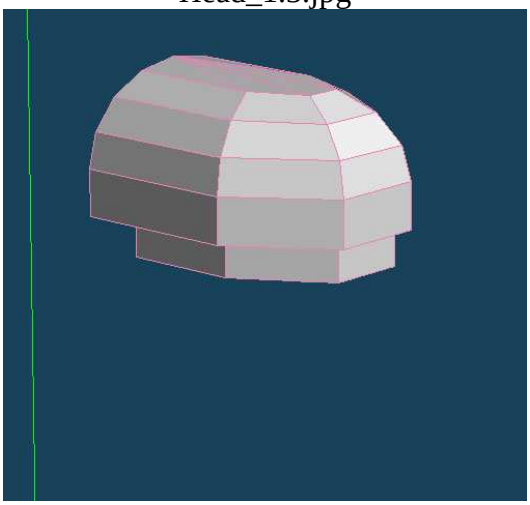

Head_1.4.jpg

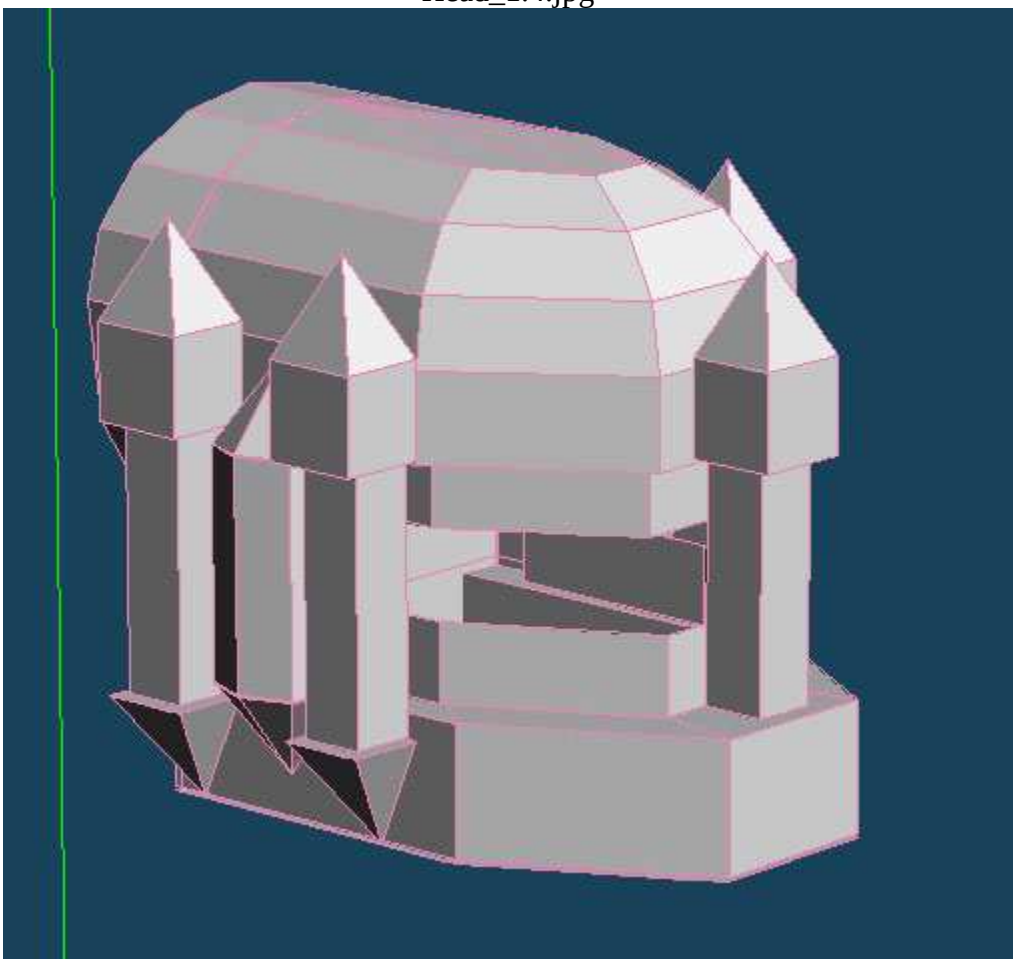

If you want to be able to put a couple miniatures in the “mouth area and be able to remove them you will want to make 2 basic assemblies according to the images Head_1.5.jpg and Head_1.6.jpg. That way you should be able to slide the top part in and out with out too much difficulty. I have NOT tested this!

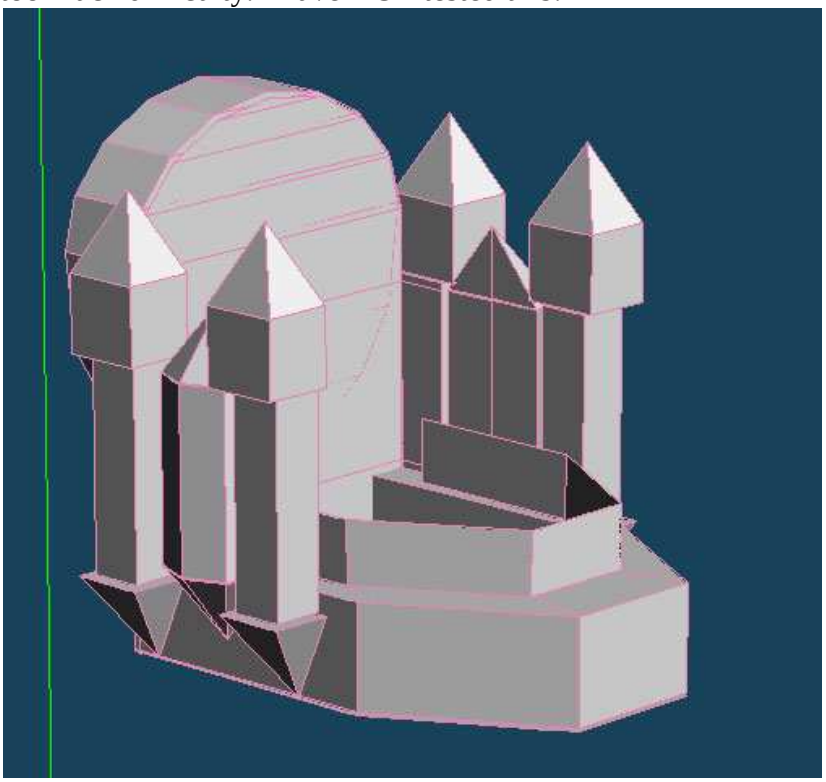

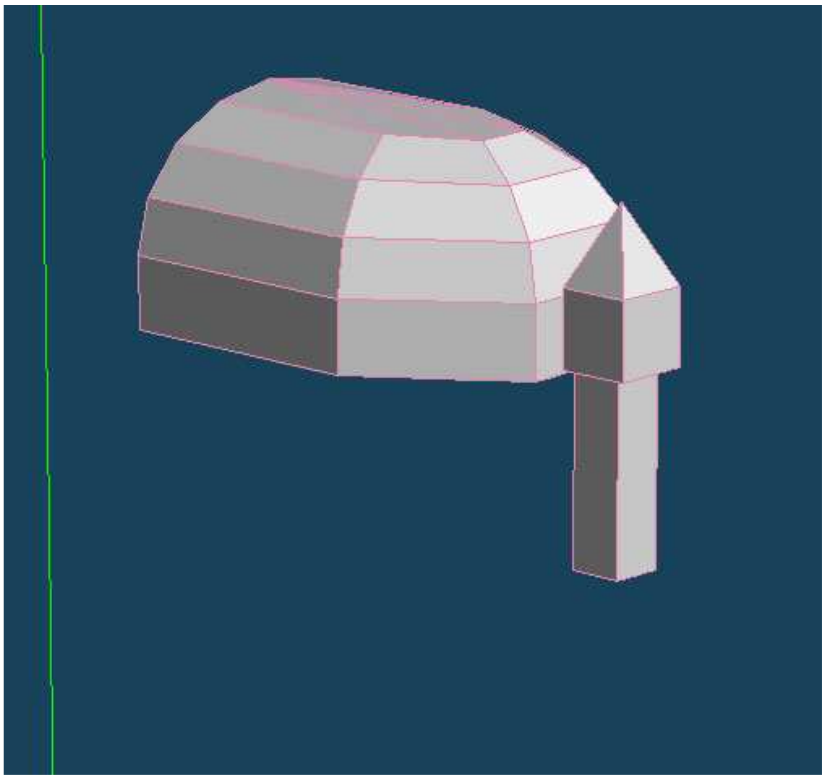

Chain Sword:
Once again build each of the objects first. Once again follow the pictures for assembly order.

ChainSword_1.1.jpg

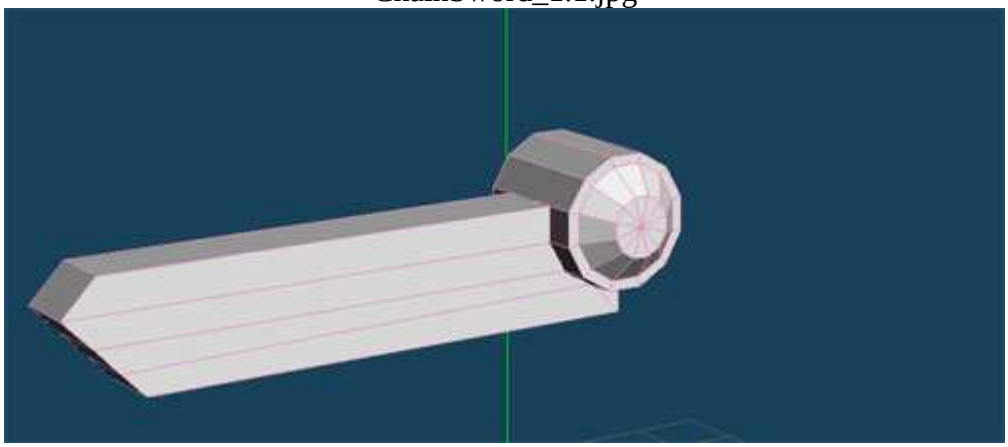

ChainSword_1.2.jpg

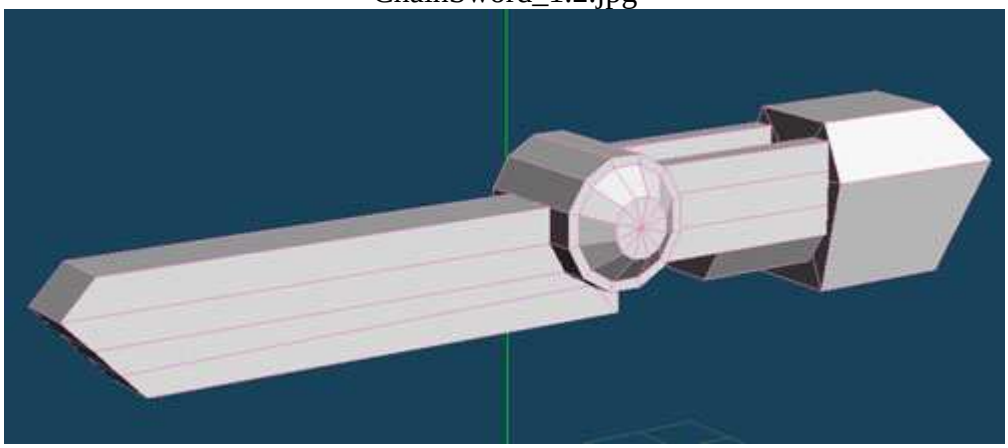

ChainSword_1.3.jpg

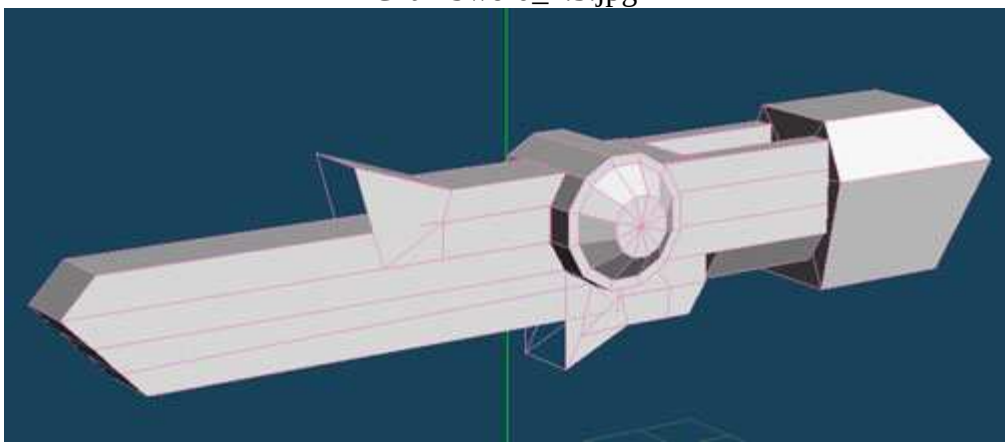

ChainSword_1.4.jpg

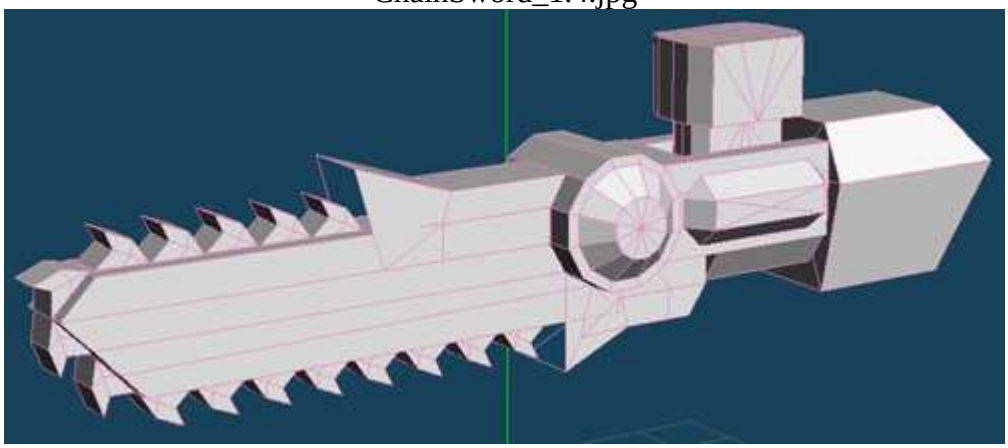

Notice the location of the little rectangle on the top behind the cylinder in picture ChainSword_1.3.jpg. As for the teeth I would do the 3 on the front of the blade first and then work back from there leaving about 1-2 mm between each one such that the last one should be under the little cowling thing on the top and bottom.

Chain Gun:

Build all your objects. The gun barrels I found were a total pain. I designed them in a way that was very efficient in materials but depending on your prep work wasn't very friendly to assemble. Like the cylinders on the legs you want to cut in a 45 degree groove on the inner folds. Once again follow the pictures for assembly order.

ChainGun_1.1.jpg

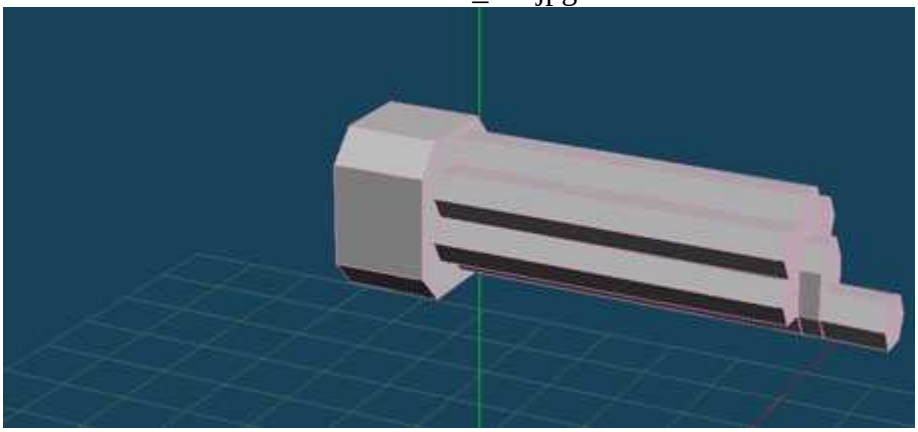

ChainGun_1.2.jpg

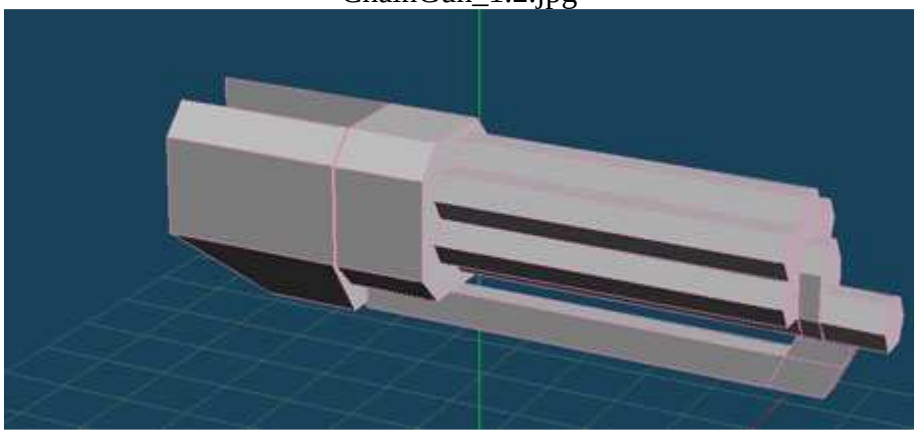

ChainGun_1.3.jpg

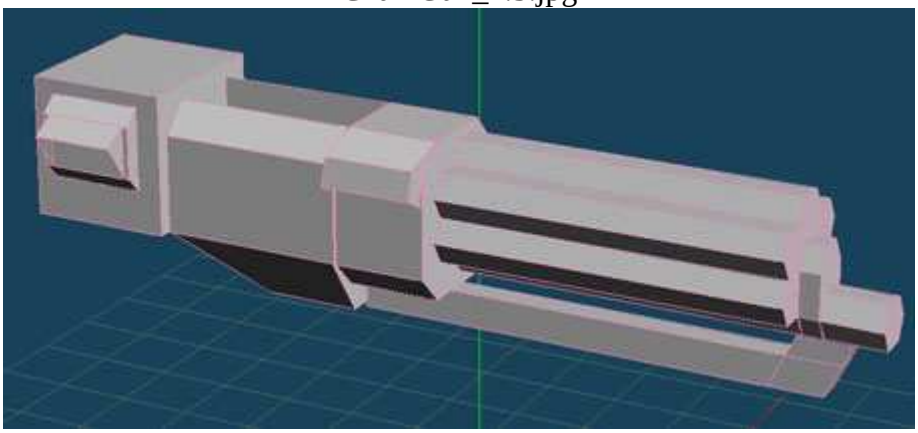

ChainGun_1.4.jpg

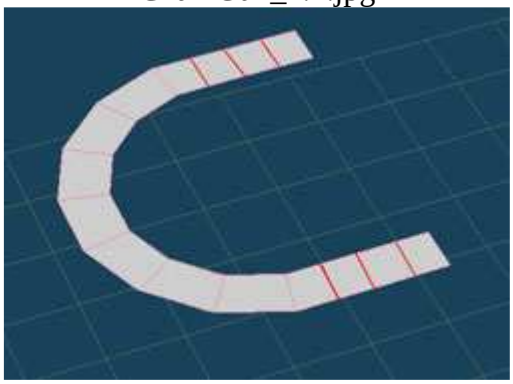

Next you'll want to do the gun belt. Refer to the red lines in image ChainGun_1.4.jpg as to where to score the belt.

ChainGun_1.5.jpg

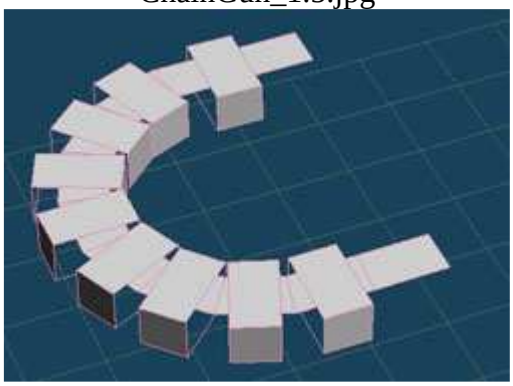

Then glue the rectangles in the positions shown in image ChainGun_1.5.jpg. Make sure that you have at least 1 inch of belt on either end after the boxes are attached.

ChainGun_1.6.jpg

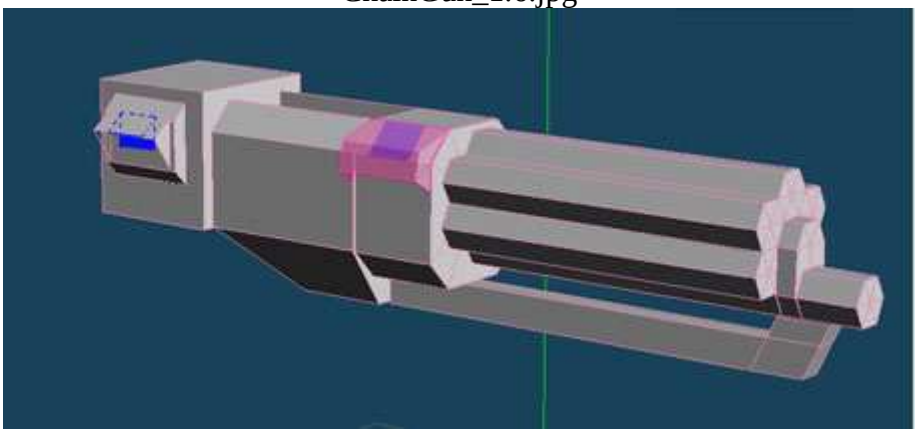

Now refer to image ChainGun_1.6.jpg to see how to attached the belt. Glue the belt to the blue areas in the image. For the back end the belt should be bent at the first score line and the first 2 faces should be glued against the outer box and the outlet port thingy. The front one should be fed up inside the inlet port and glued to the side of the big octagon box.

Shoulder add-ons:
Print 2 sets of these. And same as before on building up all pieces first. (Side note; when you put together the Crusader shoulders **BE SURE** to have the octagon centered under the roof bit.

Errata: The original bits in the errata document were too big, and instead of re-unfolding the two weapons I am simply offering the replacement pieces.

That should do it. If you have any questions let me know armorbimbo@aol.com and I will update this with any major needed changes.