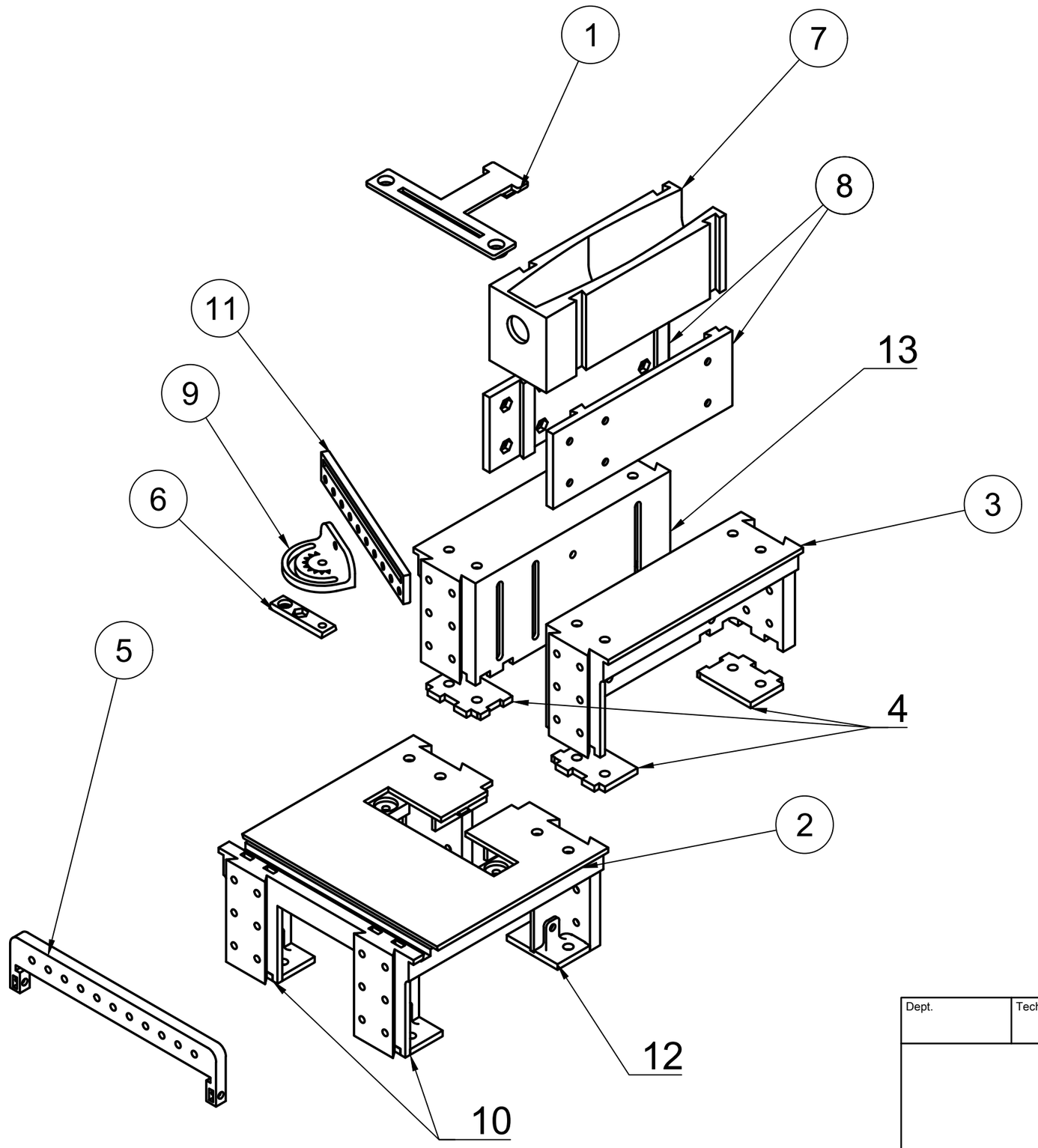

Printed Parts List		
Item	Qty Printed	File Name (.stl)
1	1	Cutting plate
2	1	Main table
3	1	L flex holder table
4	4	Flex holder table foot
5	1	Main fence
6	1	Miter gauge slider
7	1	Dremel flex holder
8	2	Flex holder plate
9	1	Miter gauge
10	2	Main table foot 1
11	1	Miter gauge wall
12	2	Main table foot 2
13	1	R flex holder table
(not shown)	1	Router suppport plate
(not shown)	1	Cutting plate 2
(not shown)	10	M3_scroll_wheel

Hardware List		
Qty	Name	Comment
Min: 15 Max: 29	M3 x 10mm Screw	incl. Two extra screws needed for the router support plate
2	M3 x 12mm (or longer) Screw	For Main fence
Min: 0 Max:16	M4 x ** Screw M4 Nut	For feet holes.Used for securing the tables
Min: 35 Max: 49	M3 Nut	Includes those needed for scroll wheels

Dept.	Technical reference	Created by	Approved by
		Albert Barber	
		Document type	Document status
		Title Dremel Flex Table Saw Assembly	DWG No.
			Rev. / Date of issue / Sheet 1/1