Paper Tanks

KV-1



INFO BOX

Heavy Tank KV-1
Development was started at the end of 1938. A prototype was produced in August 1939. First saw action in December 1939 at the Mannerheim Line. The vehicle was mass-produced from March 1940 through August 1942, with a total of 2769 manufactured.

LORD ZSEZSE WORKS

- Paper Tanks -
KV-1

Materials:
- Metal-edged ruler
- Butter knife
- Scissors or craft knife
- Cutting mat (optional)
- Multipurpose glue

1. Print out all pages and allow to dry. Use 180-200 Gram paper.

2. Using scissors or a craft knife and cutting mat, cut out all pieces along solid lines.

3. Score all the pieces: Using a ruler as a guide, run the back side of a butter knife firmly along all dashed and dotted lines.

4. Fold all pieces along score lines, using the folding key below as a reference.

Mountain Fold

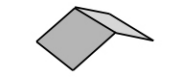

Valley Fold

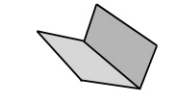

This model made for 28-30mm scaled minis.
If you would like to print it to other sized models or sets use the next print scale percentages:

Scale	%
25mm	84%
20mm	65%
18mm (HO)	60%
15mm	50%
12mm	40%
10mm (N)	34%
8mm	27%
(Z)	23%
6mm	20%



If you can, use photo paper to print; you'll really enjoy our models this way.

How to use the layers?
Use Adobe Acrobat Reader 7 or higher.
Layers and buttons will work with this program.
You can download the newest version of Adobe Reader here:
http://get.adobe.com/reader/

After you open the PDF file, you can see the button for layers on the left side (it looks like two transparent squares).
Click on them, next open the list of layers by clicking the plus sign (+).
You can't switch on/off the layer that show a lock, but the others include some kind of texture for the tank.

1. Cut out the pieces.

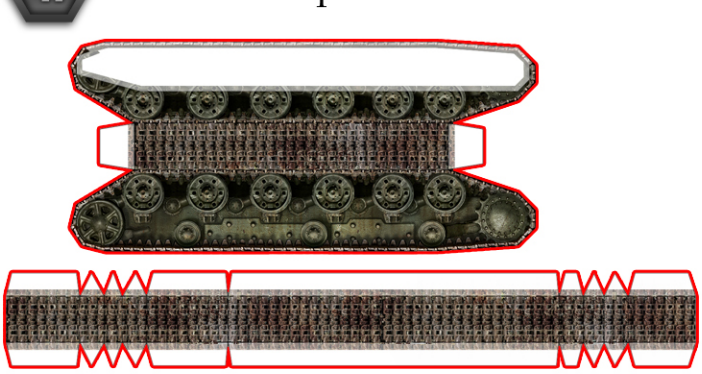

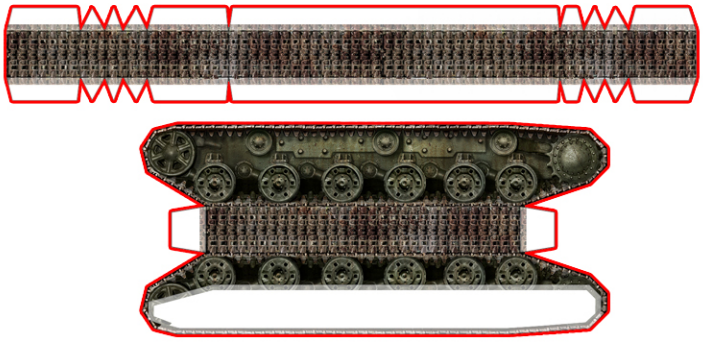

2. Fold all sides and tabs along score lines next glue the chains to the sides of caterpillar.

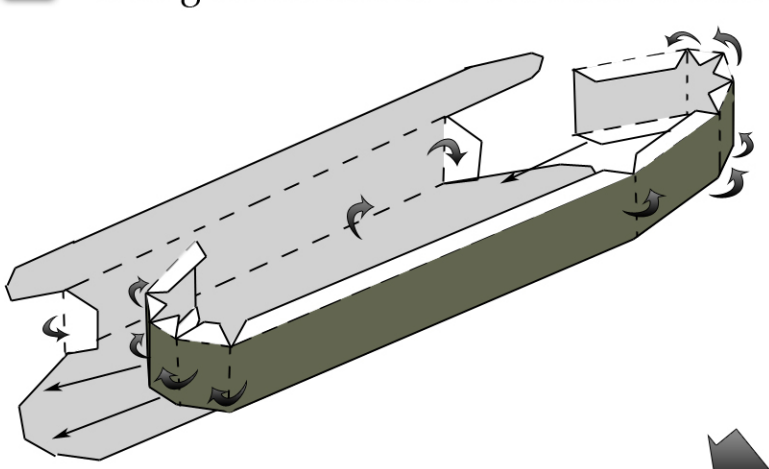

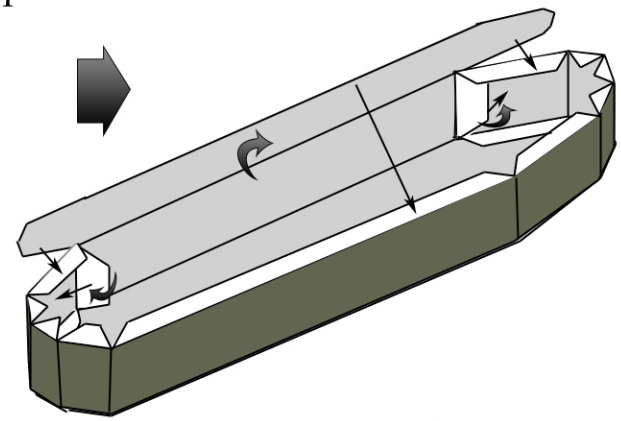

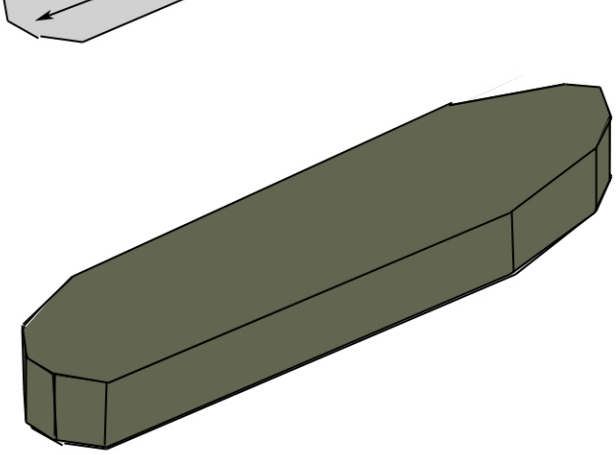

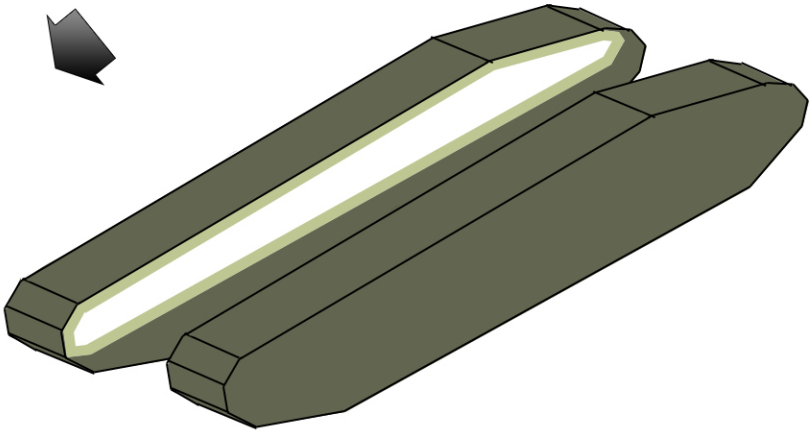

1. Cut out the piece.

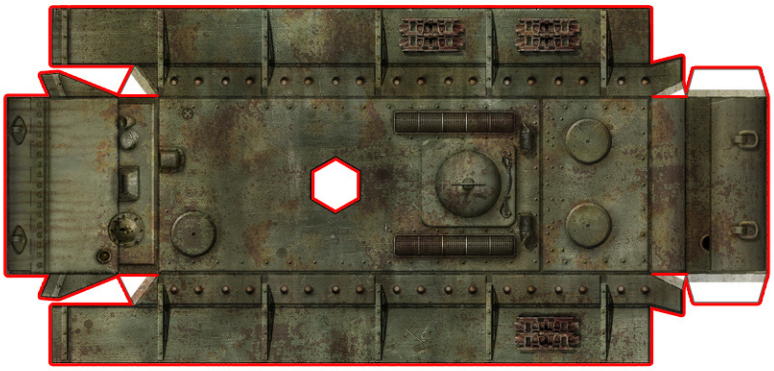

Top side of body.

2. Fold all sides and tabs along score lines next glue the tabs to the top.

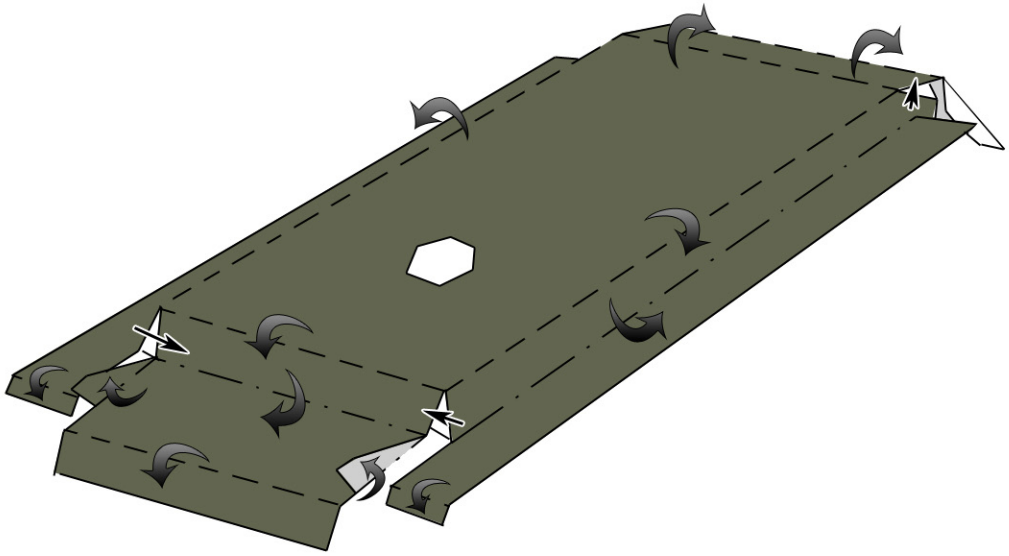

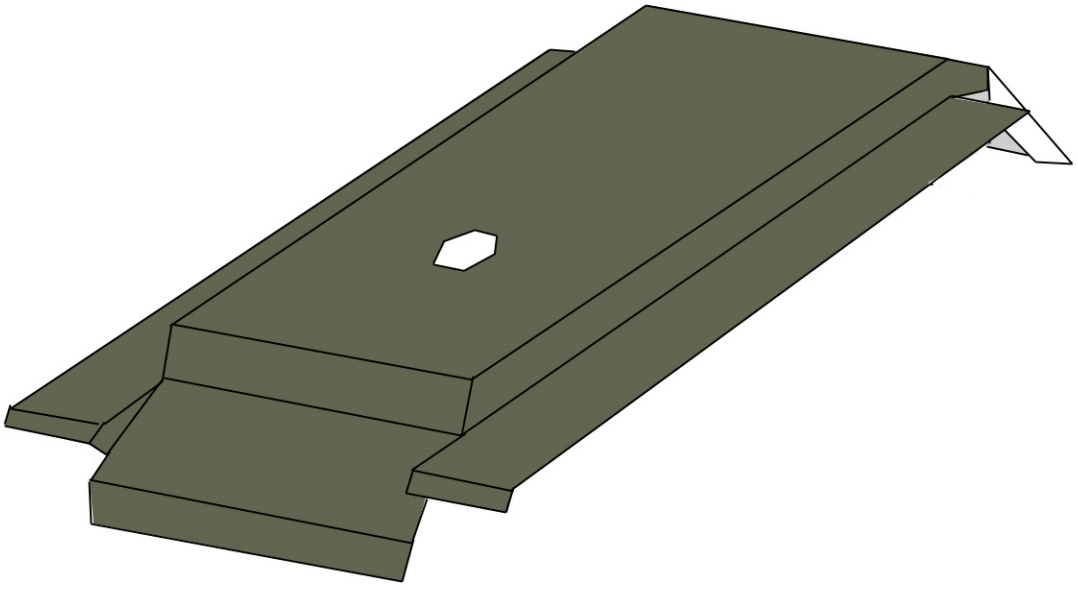

1. Cut out the piece.



Bottom side of body.

2. Fold all sides and tabs along score lines and glue the tabs to the sides.

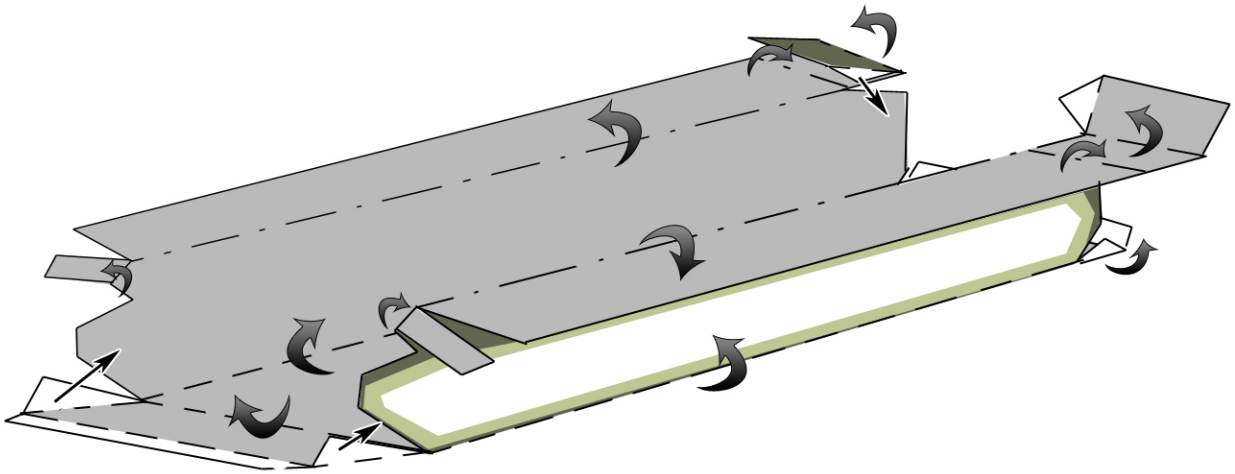

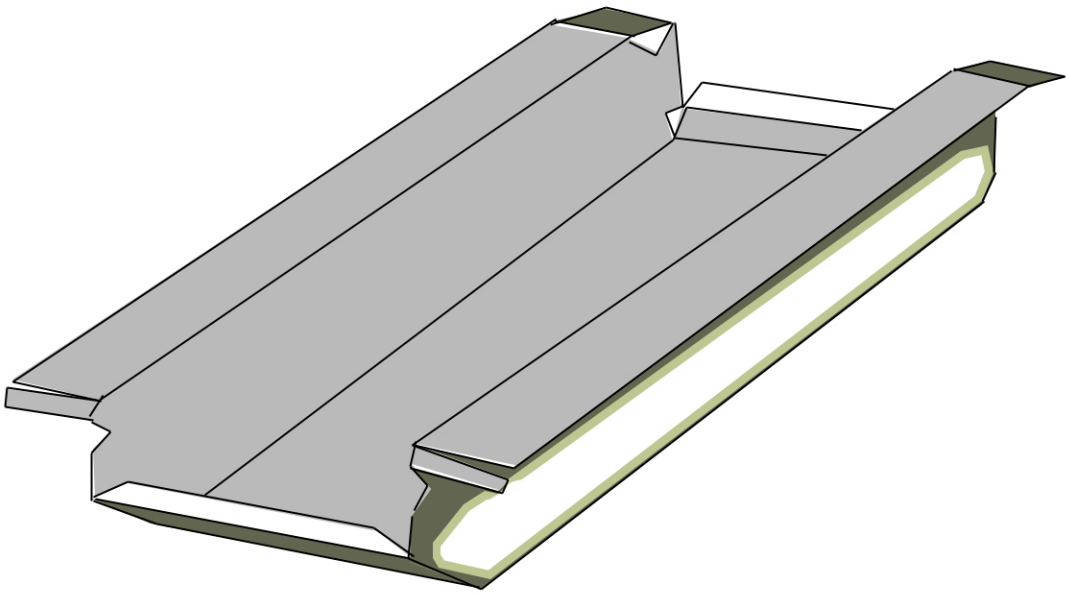

3. Glue the two sides to each other.

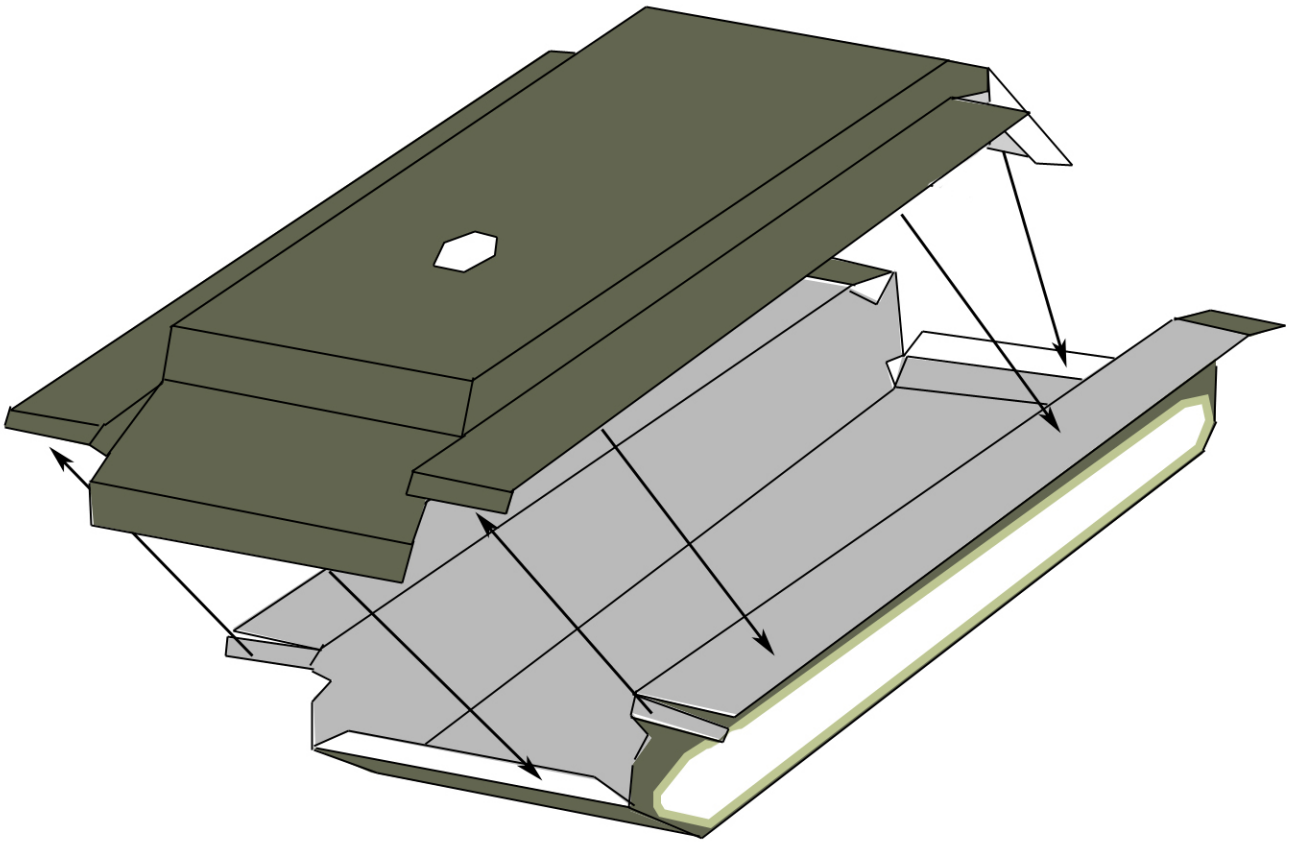

4. Glue the two caterpillars to the white marks on the side of the tank.

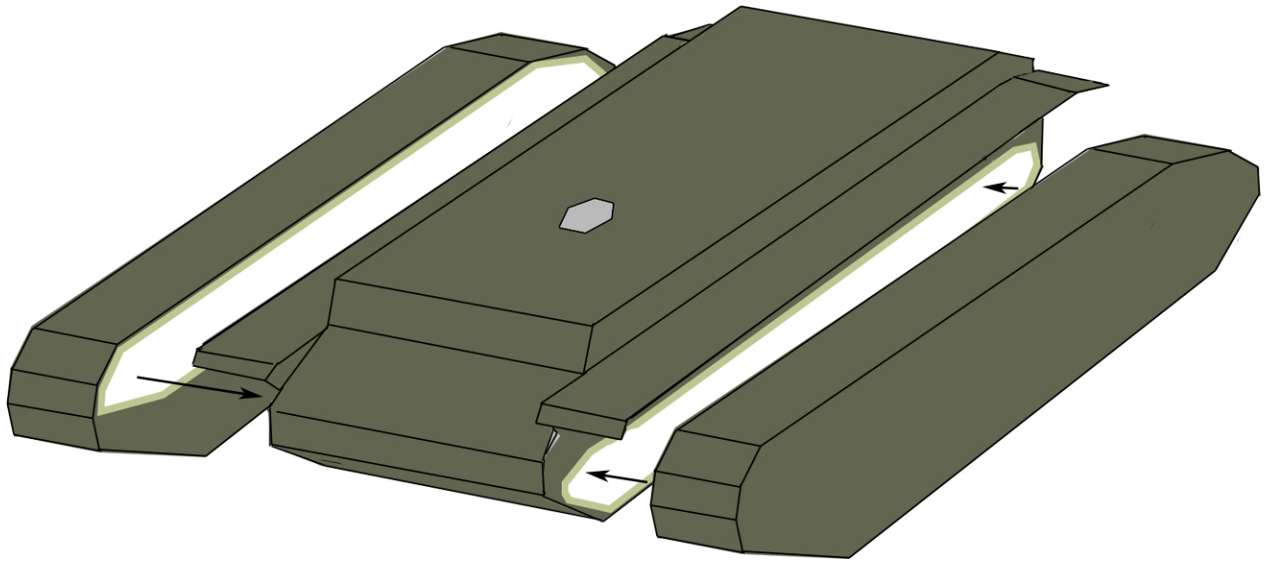

1. Cut out the pieces.

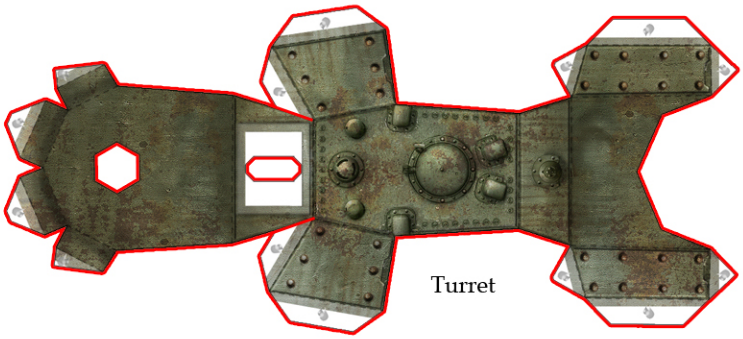

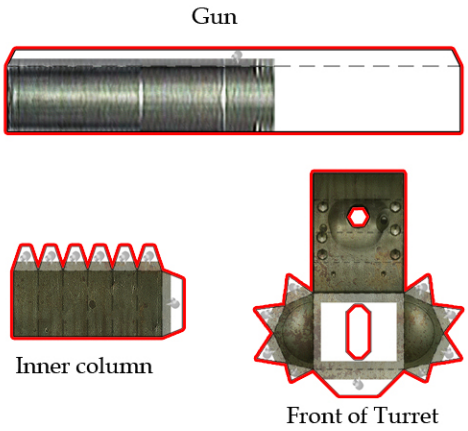

2. Fold the "Inner column" and "Turet" along score lines next glue it to the bottom of Turret.

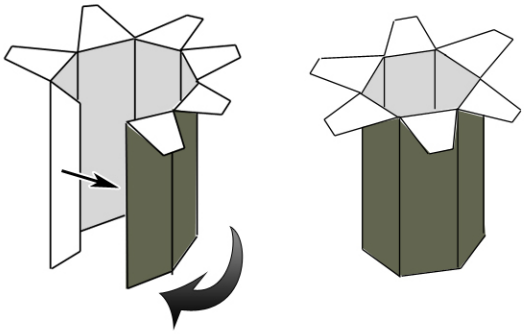

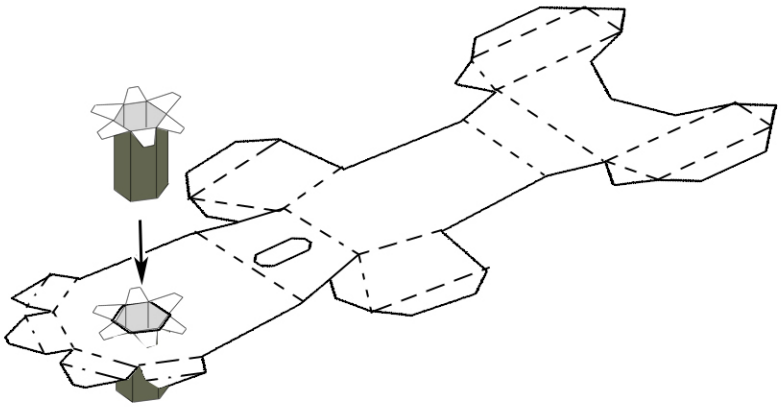

3. Glue the tabs to the sides.

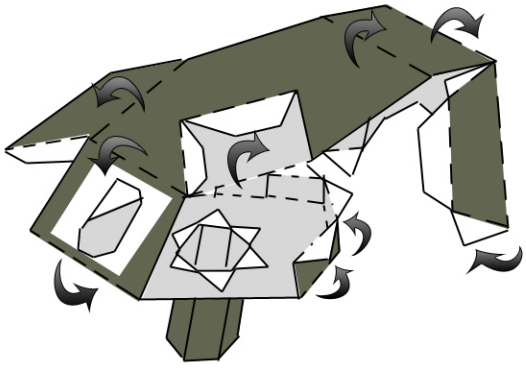

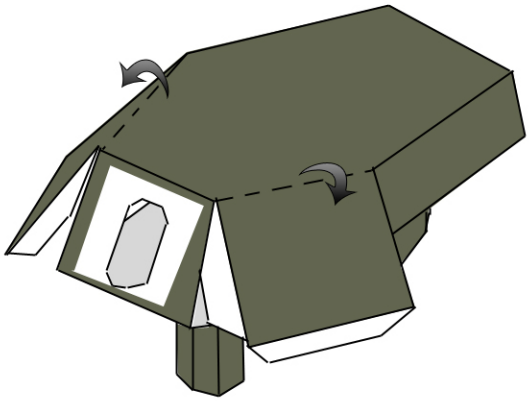

Side view.



4. Fold the sides of the "Front of Turret" along score lines, next glue its tabs to the sides.



5. Glue the "Front of Turret" to the "Turret".

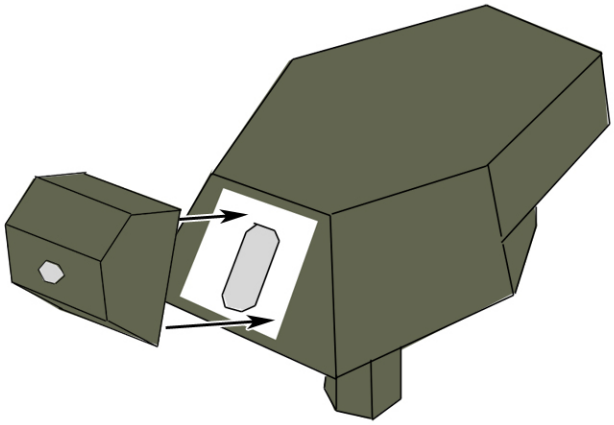

6. Reel the "Gun" and glue its tab to the side next put it into the "Turret".

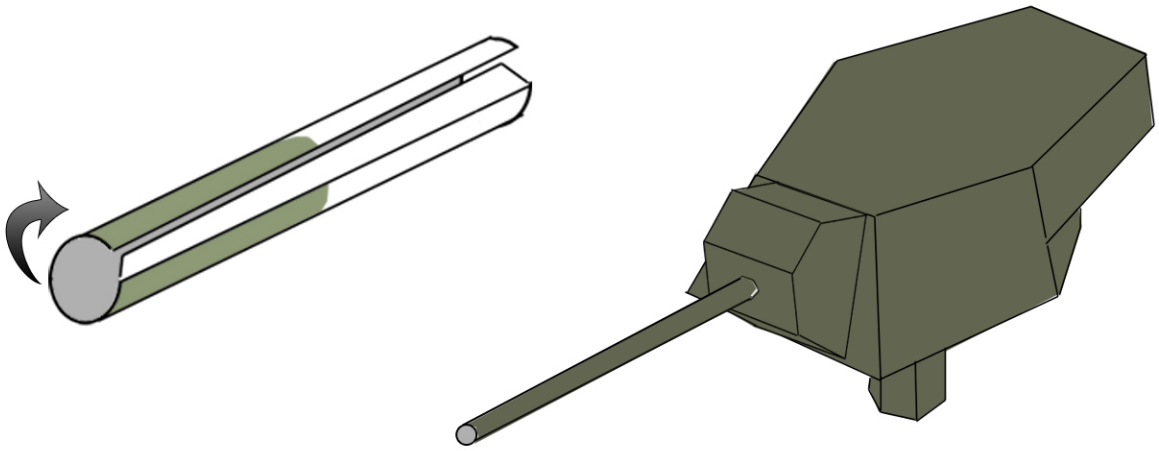

1. Cut out the pieces.

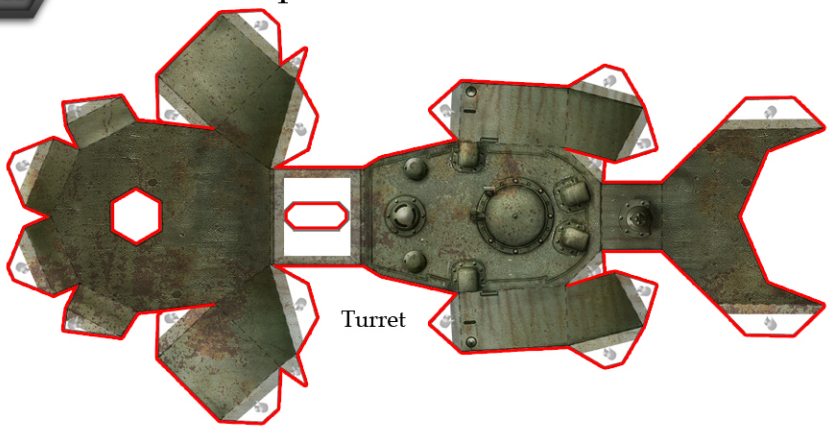

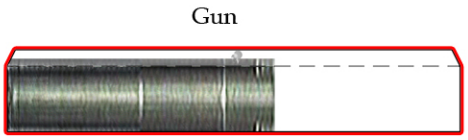

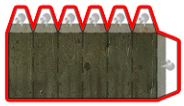

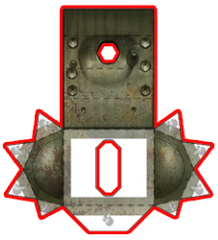

2. Fold the "Inner column" and "Turet" along score lines next glue it to the bottom of Turret.

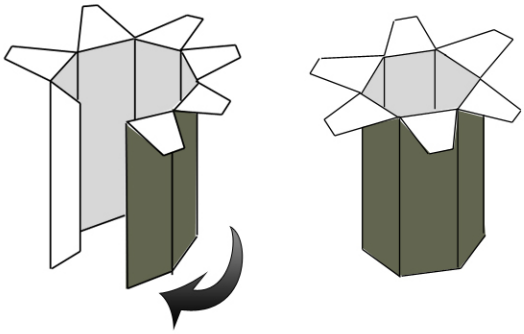

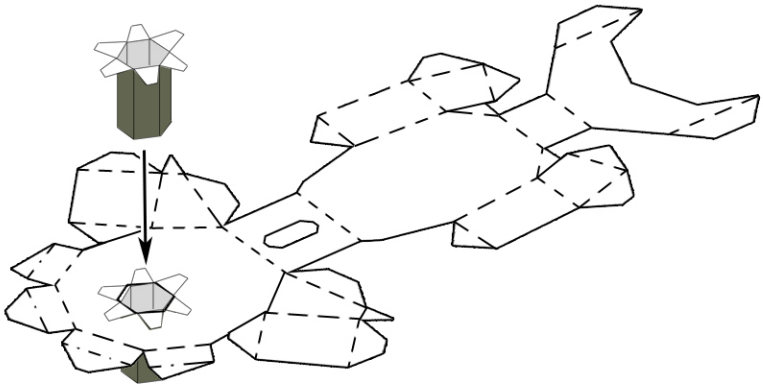

3. Glue the tabs to the sides.

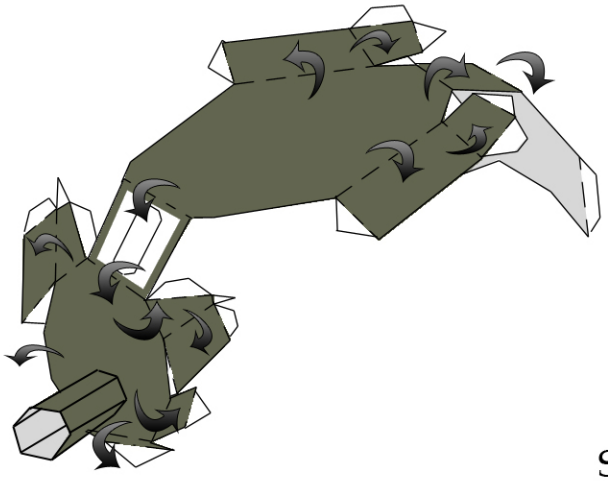

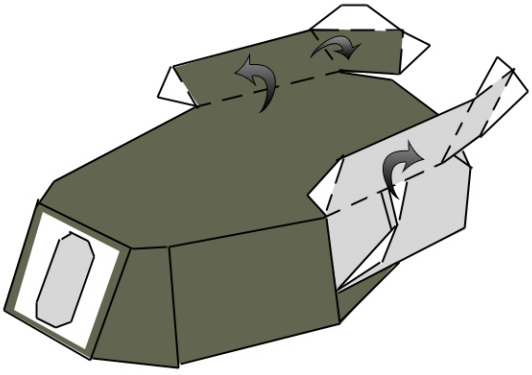

Side view.



4. Fold the sides of the "Front of Turret" along score lines, next glue its tabs to the sides.



5. Glue the "Front of Turret" to the "Turret".

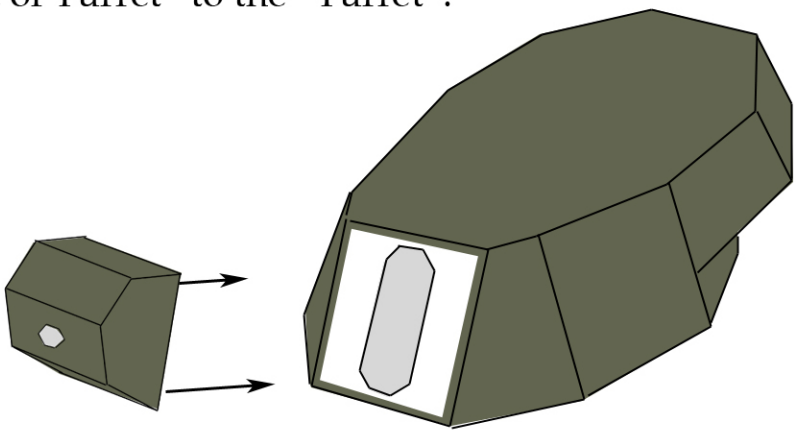

6. Reel the "Gun" and glue its tab to the side next put it into the "Turret".

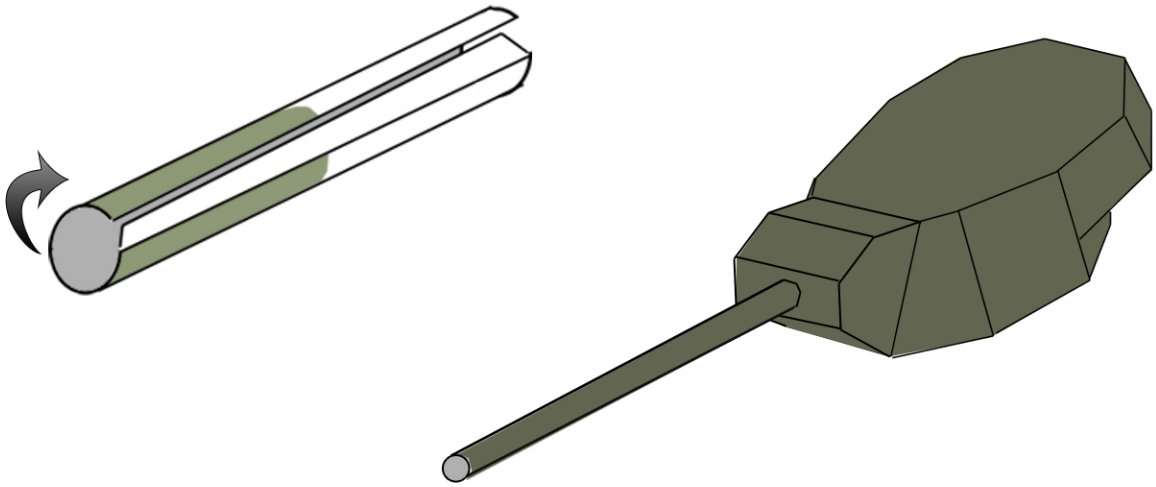

1. Put the Turret into the hole on the body of tank.

